RIETER

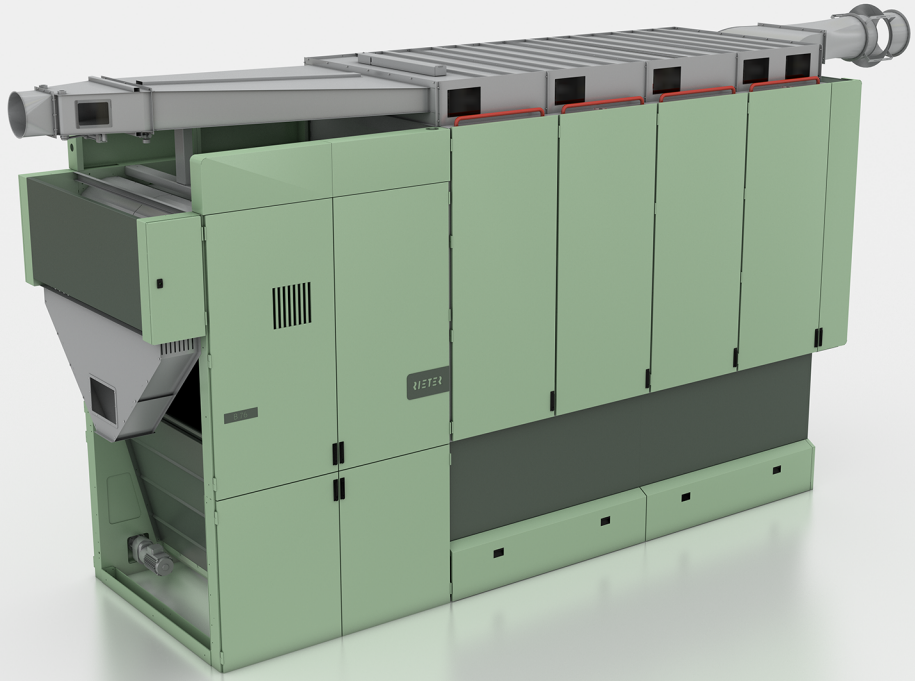

Spare Parts Catalog B 76

UNImix B 76

40021587 - 243...244

Blessed Textiles Ltd Unit 4, PK

© Rieter. All content (text, photographs, drawings and graphic) is protected by copyright. It may not be changed, neither completely nor in extracts copied, duplicated or published without written approval. Machinery or parts thereof as shown in photographs or drawings or graphics may be subject of patent or design protection.

B 76

RIETER

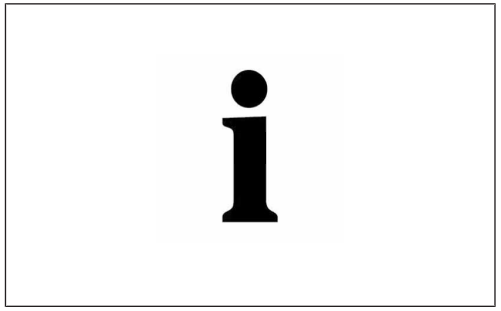

i

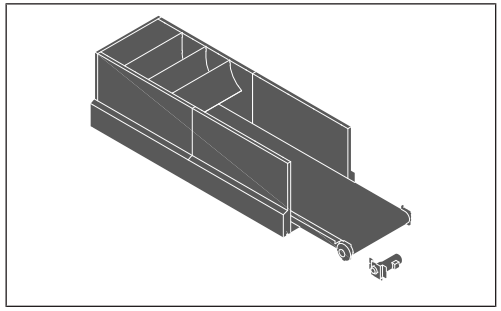

1

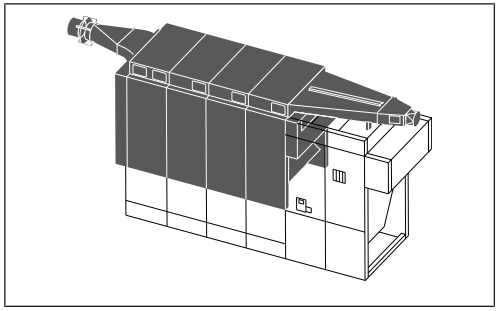

2

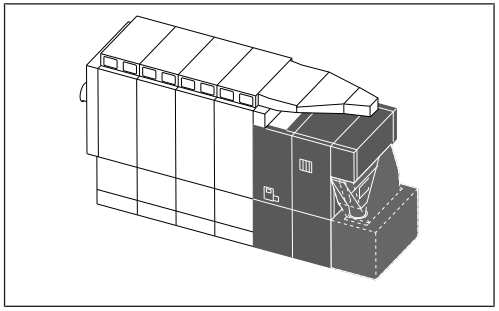

4

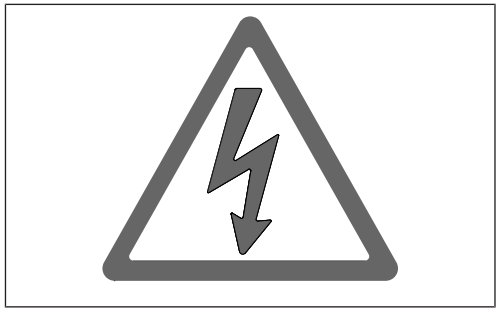

8

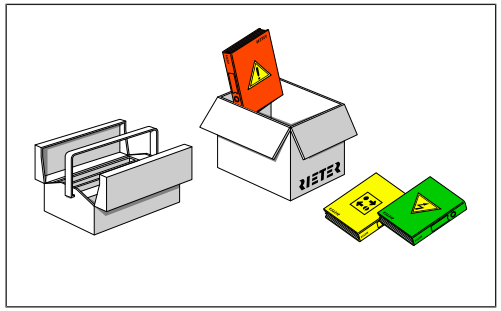

9

Dear customer,

You have made an excellent decision by opting for Rieter machines.

Our After Sales service will do everything possible to make sure that you do not have any cause to regret your decision for years to come.

Please use only original Rieter spare parts. These spare parts are always state-of-the-art and your guarantee for first-class materials and high-end processing. Please also note that Rieter is not responsible or liable for any damages to machines if this is related to spare parts or retrofits that have not been purchased directly from Rieter or through Rieter-authorized agents.

Notices on the Catalog Usage

In order to ensure a fast delivery of the spare parts, please obey the given general information.

Important Information

In the spare parts list, in the column “Spare Part“, you will find the symbol ⊕ or 🕒. On the drawings you will find the eye symbol or further instructions.

Symbol	Meaning	Explanation
⊕	Recommended spare part	Preventive stocking of the most important spare parts to keep your production ongoing is a calculable risk for you. Therefore, we have marked the most important spare parts for your machine with this identifier. Benefit from Rieter’s experience. Your Rieter Parts Service will be pleased to provide a quotation for these recommended parts on request.
🕒	Limited guarantee	Timely replacement of parts that are subject to normal wear and regular maintenance will ensure a high degree of utilization of your machine. As agreed in section 11.7 of the General Terms and Conditions of Purchase and Delivery, the guarantee is excluded for damage that is caused by continued use of worn parts or inadequate maintenance, and for the parts themselves which must be replaced due to natural wear.
👁 110	Cross-reference	Connecting parts with this assembly can be found, for example, in chapter 110.
👁 Option	Cross-reference	Additional material numbers that correspond to this catalog number can be found with other parameters in the appendix Option.
180°	Note	The assembly is shown rotated by 180°.
L 001 / R 002	Note	Catalog number for left machine side (e.g. L 001) or right machine side (e.g. R 002).

B 76

RIETER

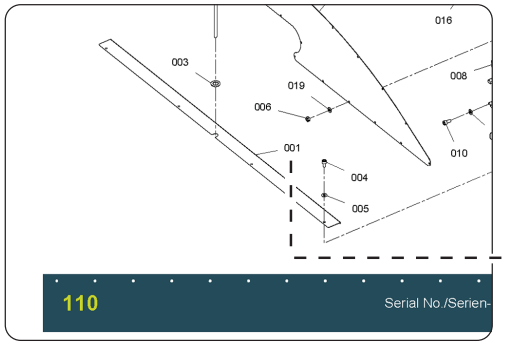

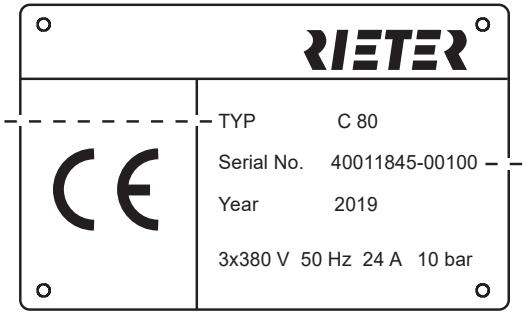

Catalog No. Katalog-Nr.	Material no. Material-Nr.	Material Designation
110.001	10903371	Channel cover
110.002	10852958	Screw ISO 4014 M12x400
110.003	10472400	Washer 17-St-200HV
110.004	10258946	Cyl. screw M8x14
110.005	10478061	Washer 8.4-St-200HV
110.006	10259607	Hex. nut M8-8
110.007	10852716	Window right
110.008	10258903	Cyl. screw M4x16
110.009	10920535	Safety switch magnetic 2NO sn7mm
110.010	10258947	Cyl. screw M8x16
110.011	10966272	Fastening angle
110.012	10244232	Cyl. screw M6x18

Item Artikel	Machine Type Maschinentyp	Important - Wichtig: Year Jahr	Important - Wichtig: Serial No. Serien-Nr.	Catalog No. Katalog-Nr.	Material no. Material-Nr.	Material Designation Materialbezeichnung	Quantity Menge
1	C 80	2019	40011845-00100	110.001	10903371	Channel cover	1

B 76

Maschinenfabrik Rieter AG, CH-8406 Winterthur

RIETER

Parts

Please fill in the form and send it to your agent or upload it directly to our online tool ESSENTIALorder (login.rieter.com).

Bitte senden Sie das ausgefüllte Formular an Ihren Agenten oder laden Sie es direkt in unserem Online-Tool ESSENTIALorder (login.rieter.com) hoch.

- ☐ Proforma Invoice / Proformarechnung
- ☐ Quotation / Angebot
- ☒ Order / Bestellung
- ☐ Partial Shipment / Teillieferung
- ☒ Full Shipment / Komplettlieferung

Customer No. / Kunden-Nr.: 50000

Customer Address / Kundenadresse:
We make it LTD
Mill Road 91
RIE TER Mill Town
United Kingdom

Customer Reference / Kundenreferenz: 000 - 01.10.2019

Shipping Address / Versandadresse:
We make it LTD / John Smith
Mill Road 91, RIE TER Mill Town

Means of Transport / Transportart: by courier

Remarks / Bemerkungen:

Date/Signature / Datum/Unterschrift:

Item / Artikel	Machine Type / Maschinentyp	Important - Wichtig: Year / Jahr	Important - Wichtig: Serial No. / Serien-Nr.	Catalog No. / Katalog-Nr.	Material no. / Material-Nr.	Material Designation / Materialbezeichnung	Quantity / Menge
1	C80	2019	40011845-00100	110.001	10903371	Channel cover	1
2	C80	2019	40011845-00100	110.002	10852958	Screw M12x400	4
3	C80	2019	40011845-00100	110.004	10258946	Cyl. screw M8x14	2

Maschinenfabrik Rieter AG, CH-8406 Winterthur

RIETER

Parts

Please fill in the form and send it to your agent or upload it directly to our online tool ESSENTIALorder (login.rieter.com).

Bitte senden Sie das ausgefüllte Formular an Ihren Agenten oder laden Sie es direkt in unserem Online-Tool ESSENTIALorder (login.rieter.com) hoch.

☐ Proforma Invoice
Proformarechnung

☐ Quotation
Angebot

☐ Order
Bestellung

☐ Partial Shipment
Teillieferung

☐ Full Shipment
Komplettlieferung

Customer No.
Kunden-Nr.

Customer Address
Kundenadresse

Customer Reference
Kundenreferenz

Shipping Address
Versandadresse

Means of Transport
Transportart

Remarks
Bemerkungen

DATE/SIGNATURE
Datum/Unterschrift

Item Artikel	Machine Type Maschinentyp	Important - Wichtig Year Jahr	Serial No. Serien-Nr.	Catalog No. Katalog-Nr.	Material no. Material-Nr.	Material Designation Materialbezeichnung	Quantity Menge

Maschinenfabrik Rieter AG, CH-8406 Winterthur

RIETER

Item Artikel	Machine Type Maschinentyp	Important - Wichtig Year Jahr	Important - Wichtig Serial No. Serien-Nr.	Catalog No. Katalog-Nr.	Material no. Material-Nr.	Material Designation Materialbezeichnung	Quantity Menge

Maschinenfabrik Rieter AG, CH-8406 Winterthur

RIETER

Parts

Please fill in the form and send it to your agent or upload it directly to our online tool ESSENTIALorder (login.rieter.com).

Bitte senden Sie das ausgefüllte Formular an Ihren Agenten oder laden Sie es direkt in unserem Online-Tool ESSENTIALorder (login.rieter.com) hoch.

☐ Proforma Invoice
Proformarechnung

☐ Quotation
Angebot

☐ Order
Bestellung

☐ Partial Shipment
Teillieferung

☐ Full Shipment
Komplettlieferung

Customer No.
Kunden-Nr.

Customer Address
Kundenadresse

Customer Reference
Kundenreferenz

Shipping Address
Versandadresse

Means of Transport
Transportart

Remarks
Bemerkungen

DATE/SIGNATURE
Datum/Unterschrift

Item Artikel	Machine Type Maschinentyp	Important - Wichtig Year Jahr	Serial No. Serien-Nr.	Catalog No. Katalog-Nr.	Material no. Material-Nr.	Material Designation Materialbezeichnung	Quantity Menge

Maschinenfabrik Rieter AG, CH-8406 Winterthur

RIETER

Item Artikel	Machine Type Maschinentyp	Important - Wichtig Year Jahr	Important - Wichtig Serial No. Serien-Nr.	Catalog No. Katalog-Nr.	Material no. Material-Nr.	Material Designation Materialbezeichnung	Quantity Menge

Maschinenfabrik Rieter AG, CH-8406 Winterthur

RIETER

Parts

Please fill in the form and send it to your agent or upload it directly to our online tool ESSENTIALorder (login.rieter.com).

Bitte senden Sie das ausgefüllte Formular an Ihren Agenten oder laden Sie es direkt in unserem Online-Tool ESSENTIALorder (login.rieter.com) hoch.

☐ Proforma Invoice
Proformarechnung

☐ Quotation
Angebot

☐ Order
Bestellung

☐ Partial Shipment
Teillieferung

☐ Full Shipment
Komplettlieferung

Customer No.
Kunden-Nr.

Customer Address
Kundenadresse

Customer Reference
Kundenreferenz

Shipping Address
Versandadresse

Means of Transport
Transportart

Remarks
Bemerkungen

DATE/SIGNATURE
Datum/Unterschrift

Item Artikel	Machine Type Maschinentyp	Important - Wichtig Year Jahr	Serial No. Serien-Nr.	Catalog No. Katalog-Nr.	Material no. Material-Nr.	Material Designation Materialbezeichnung	Quantity Menge

Maschinenfabrik Rieter AG, CH-8406 Winterthur

RIETER

Item Artikel	Machine Type Maschinentyp	Important - Wichtig Year Jahr	Important - Wichtig Serial No. Serien-Nr.	Catalog No. Katalog-Nr.	Material no. Material-Nr.	Material Designation Materialbezeichnung	Quantity Menge

B 76

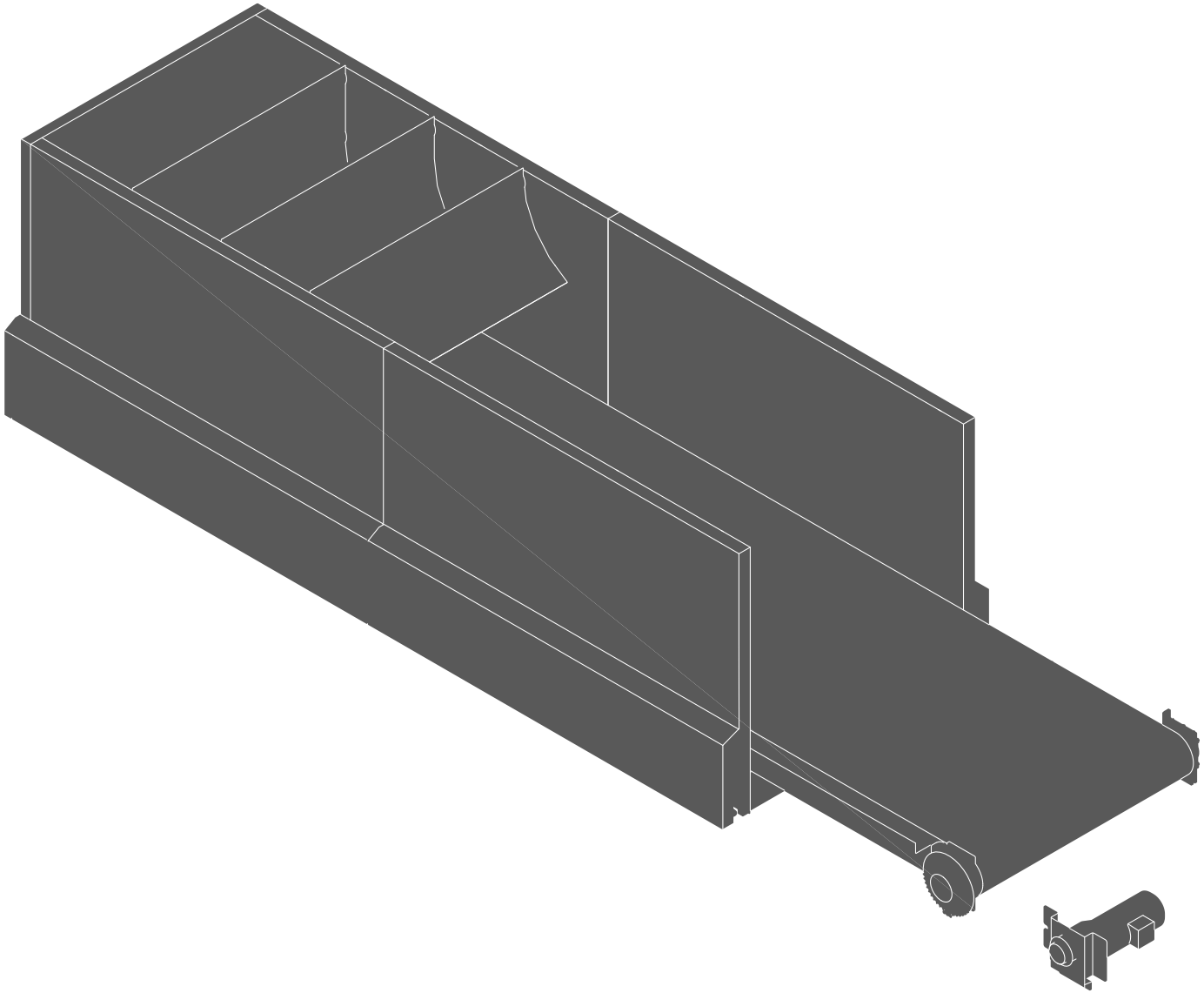

ZNP000000000000001000067826301000_1.svg

Serial No./Serien-Nr. : 40021587-243...244 | Date/Datum : 19.09.2021

B 76

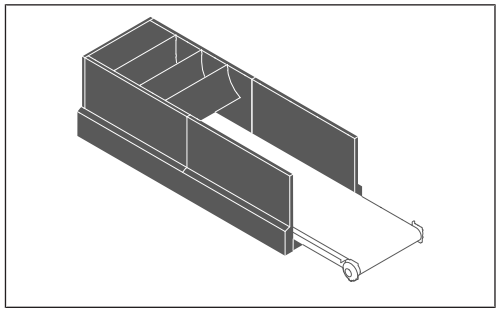

110

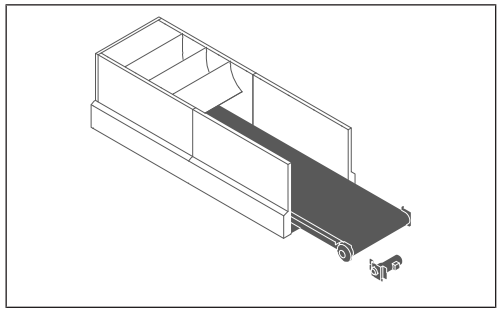

120

B 76

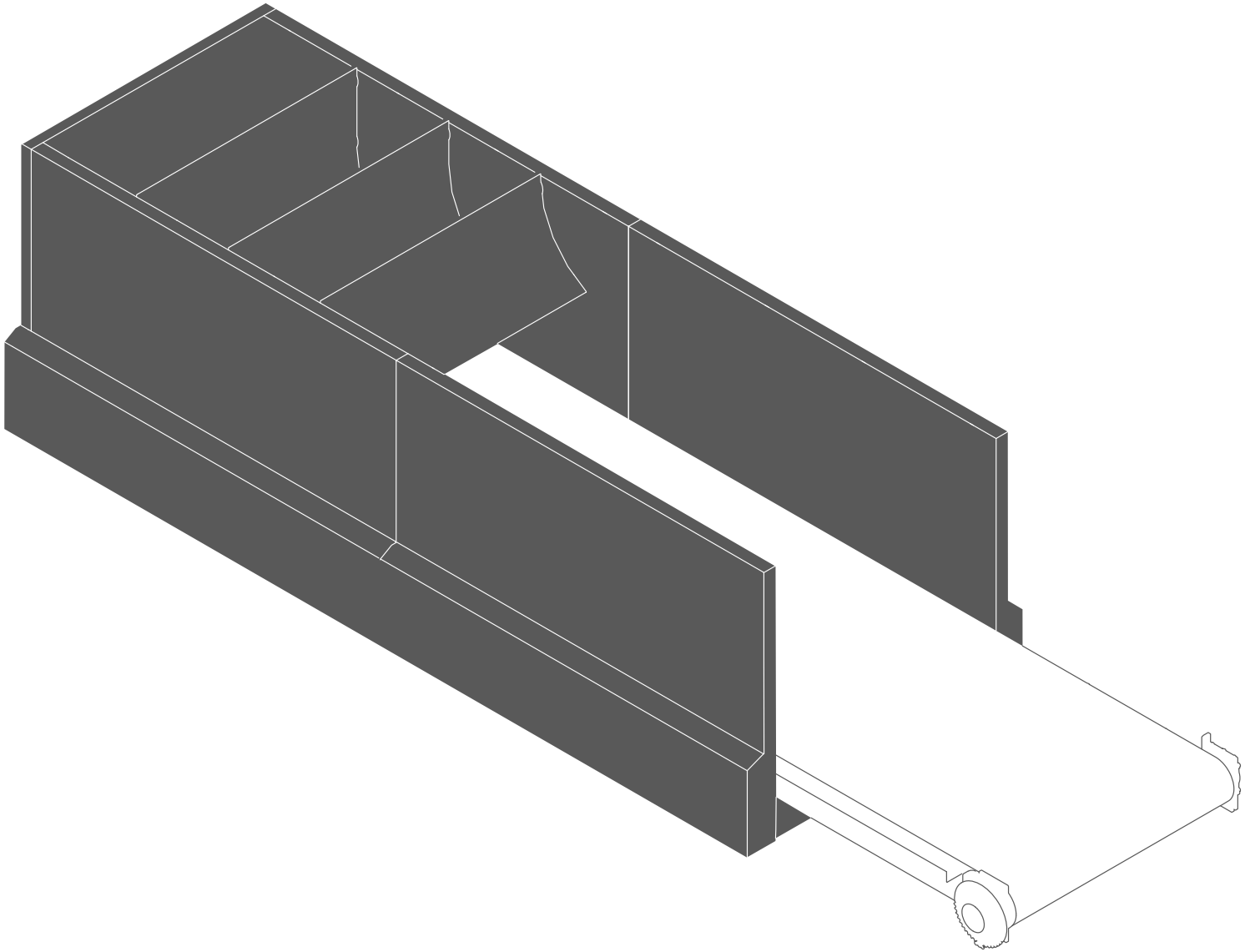

ZNP0000000000000001000067806301000_1.svg

B 76

RIETER

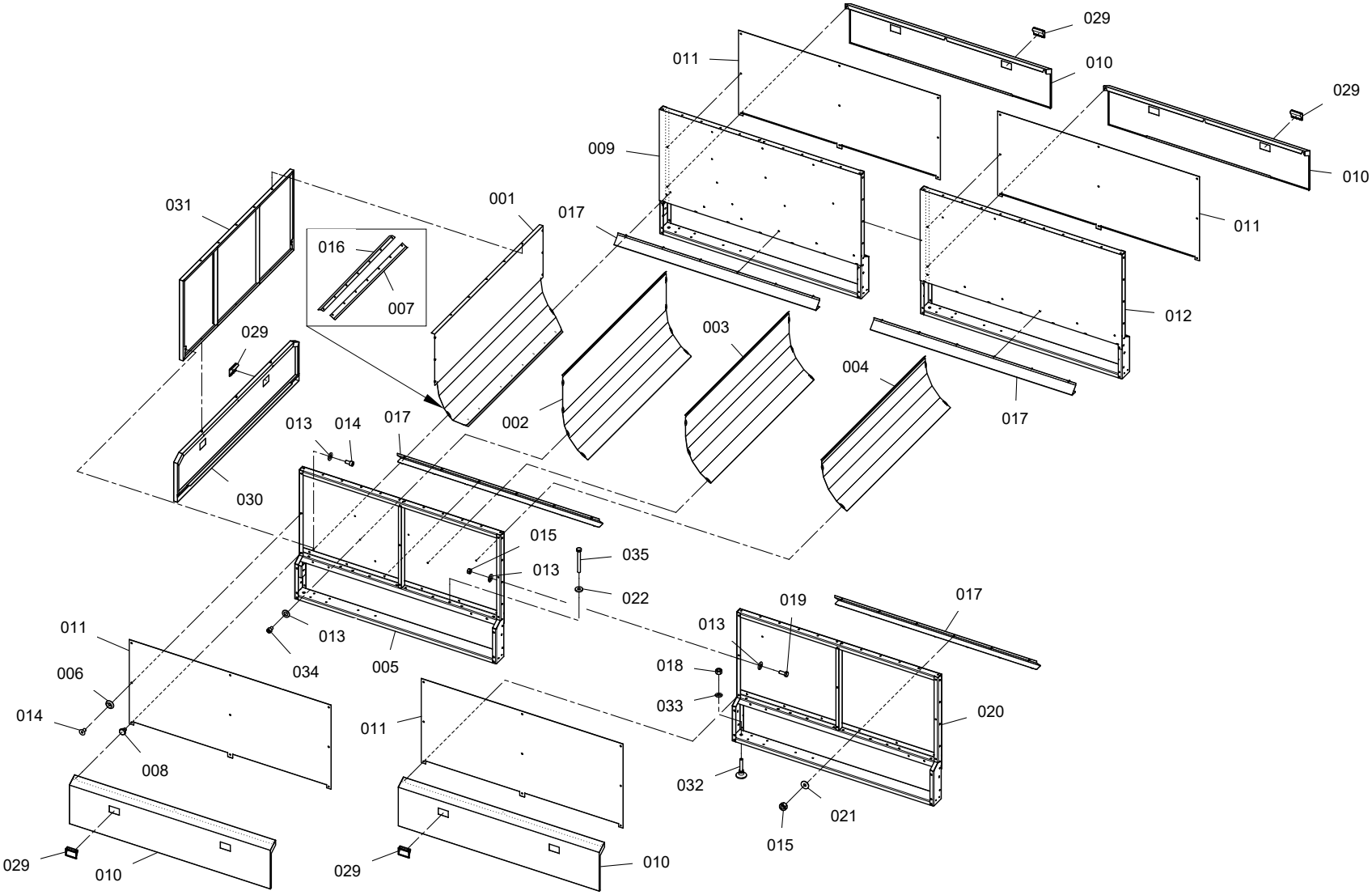

ZED0000000000000000001116128301003_1.svg

Catalog No. Katalog-Nr.	Material no. Material-Nr.	Material Designation	Materialbezeichnung	Symbol Symbol
110.001	10952495	Rear wall below	Rückwand unten	
110.002	10952559	Deflection consist of 7	Umlenkung aus 7	
110.003	10952461	Deflection consist of 6	Umlenkung aus 6	
110.004	10952453	Deflection consist of 5	Umlenkung aus 5	
110.005	10830369	Frame rear L	Rahmen hinten L	
110.006	10523894	Washer w. lowering SN213912-8.4/25	Scheibe m. Senkung SN213912-8.4/25	
110.007	10952500	Sealing lip	Dichtlippe	
110.008	10419712	Screw special	Schraube spezial	
110.009	10830674	Frame rear R	Rahmen hinten R	
110.010	10821122	Cover	Abdeckung	
110.011	10830969	Cover plate	Abdeckplatte	
110.012	10830672	Frame front R	Rahmen Front R	
110.013	10580160	Washer 8.4-St-200HV	Scheibe 8.4-St-200HV	
110.014	10259322	Socket flat head screw M8x16	Senkschraube M8x16	
110.015	10259607	Hex. nut M8-8	6kt-Mutter M8-8	
110.016	10952498	Flat connecting	Klemmleiste	
110.017	10838852	Sealing bracket	Dichtwinkel	
110.018	10431843	Hex. nut M16-8	6kt-Mutter M16-8	
110.019	10259085	Hex. screw M8x20	6kt-Schraube M8x20	
110.020	10831505	Frame front L	Rahmen Front L	
110.021	10356696	Washer 8.4-St-200HV	Scheibe 8.4-St-200HV	
110.022	10314565	Washer 8.4	Scheibe 8.4	
110.029	10443290	Shell handle black 1.5	Schalengriff schwarz 1.5	
110.030	10952363	Cape hood rear	Verdeck hinten	
110.031	10952370	Cover rear	Abdeckung hinten	
110.032	10951786	Foot M16/60x100	Fuss M16/60x100	
110.033	10478064	Washer 17-St-200HV	Scheibe 17-St-200HV	
110.034	10258947	Cyl. screw M8x16	Zyl.Schraube M8x16	
110.035	10259141	Hex. screw M8x75	6kt-Schraube M8x75	

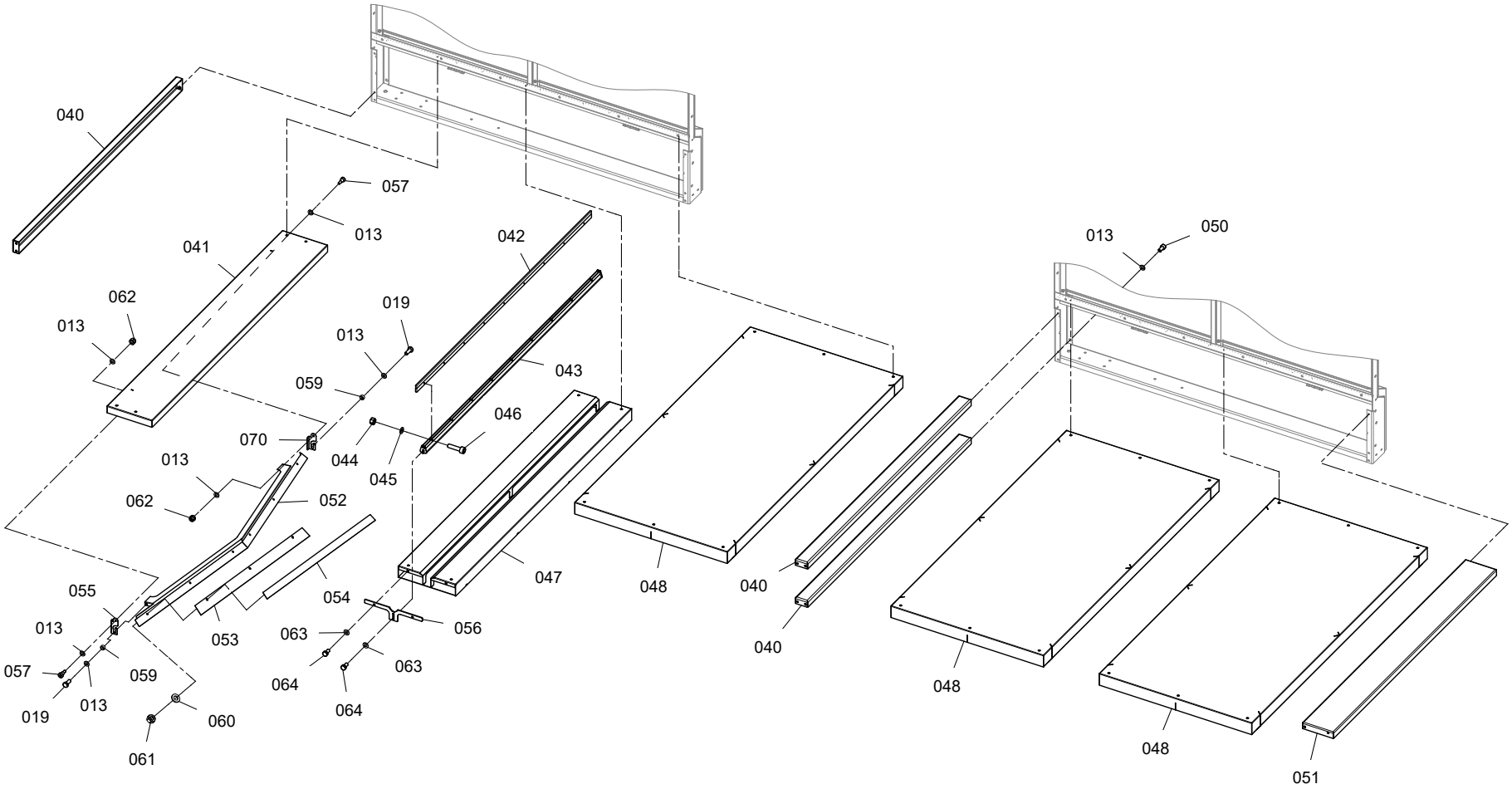

ZED0000000000000000001116128301003_2.svg

Catalog No. Katalog-Nr.	Material no. Material-Nr.	Material Designation	Materialbezeichnung	Symbol Symbol
110.013	10580160	Washer 8.4-St-200HV	Scheibe 8.4-St-200HV	
110.019	10259085	Hex. screw M8x20	6kt-Schraube M8x20	
110.040	10952126	Connecting strut	Verbindungsstrebe	
110.041	10952731	Suspension complete	Aufhängung komplett	
110.042	10952190	Brush	Bürste	
110.043	10958343	Brush holder	Bürstenhalter	
110.044	10259463	Hex. nut M5-8	6kt-Mutter M5-8	
110.045	10259623	Washer 5.3-St-200HV	Scheibe 5.3-St-200HV	
110.046	10244210	Cyl. screw M5x20	Zyl.Schraube M5x20	
110.047	10952184	Slide platform	Gleitplatte	
110.048	10906405	Table complete B76	Tisch komplett B76	
110.050	10258945	Cyl. screw M8x12	Zyl.Schraube M8x12	
110.051	10952098	Slide table short	Gleittisch kurz	
110.052	10960661	Wiper support 1	Abstreiferhalter 1	
110.053	10960704	Flat connecting	Klemmleiste	
110.054	10960705	Wiper	Abstreifer	
110.055	10924246	Suspension left	Aufhängung links	
110.056	10831368	Cover	Abdeckung	
110.057	10625291	Hex.socket head shoulder screw 8x10	Zyl.Passschraube 8x10	
110.059	10354222	Distance sleeve 9/12x6	Distanzbuchse 9/12x6	
110.060	10258850	Washer 6.4-St-140HV	Scheibe 6.4-St-140HV	
110.061	10258844	Hex. nut M6-8	6kt-Mutter M6-8	
110.062	10603912	Hex. nut M6-8	6kt-Mutter M6-8	
110.063	10478061	Washer 8.4-St-200HV	Scheibe 8.4-St-200HV	
110.064	10259084	Hex. screw M8x16	6kt-Schraube M8x16	
110.070	10924247	Suspension right	Aufhängung rechts	

B 76

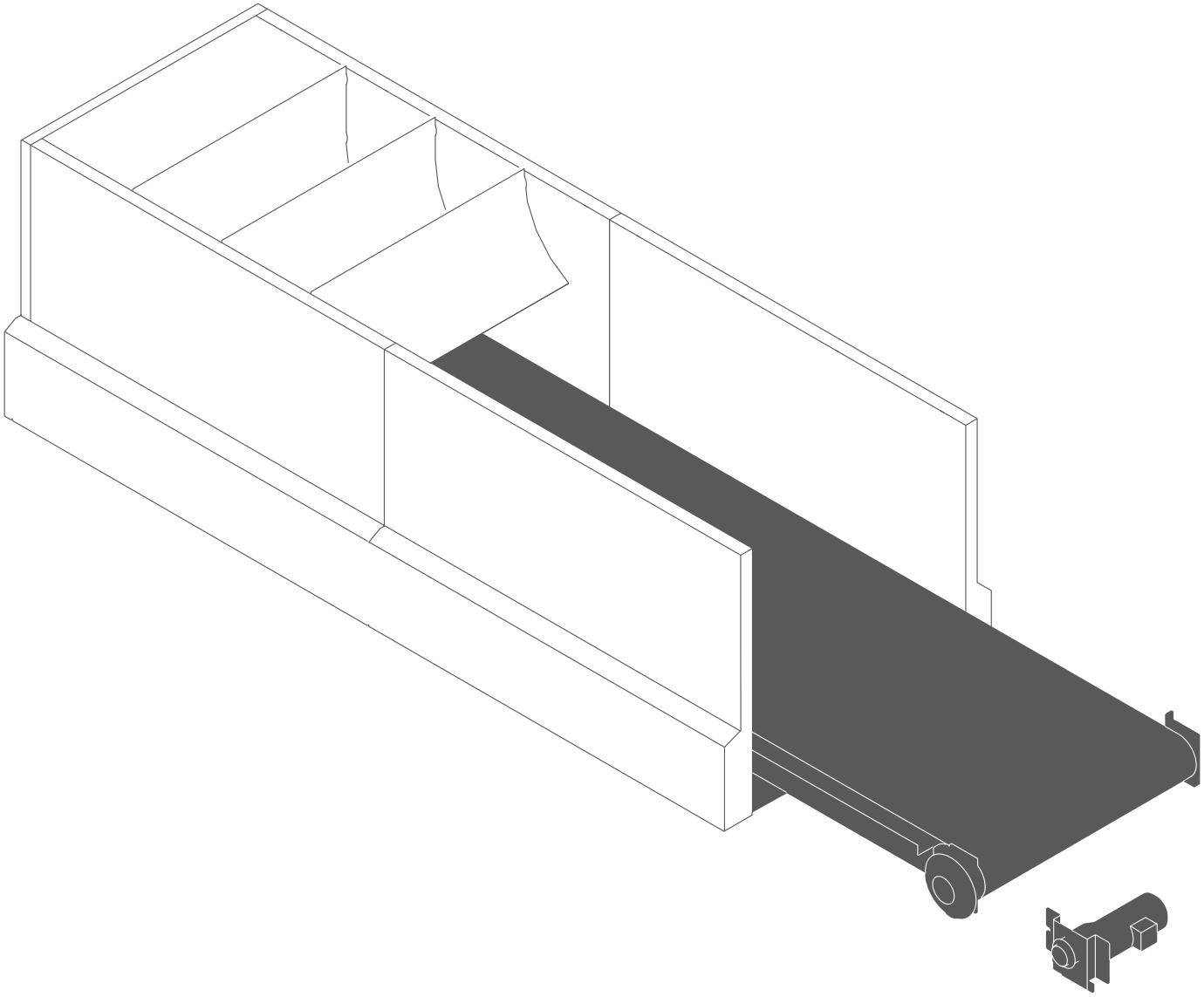

ZNP0000000000000010000678068010 00_1.svg

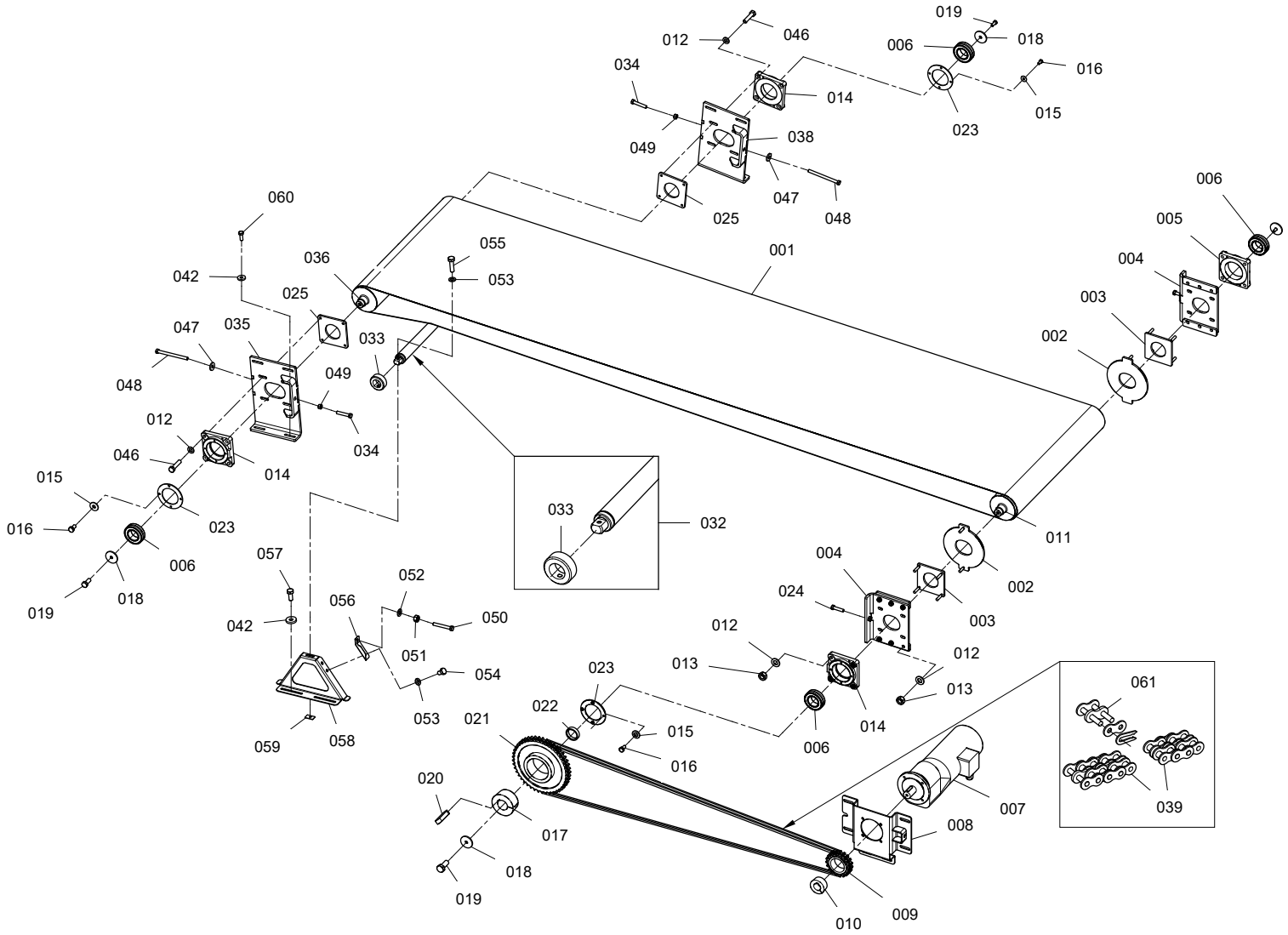

ZED0000000000000000001116128701001_1.svg

Catalog No. Katalog-Nr.	Material no. Material-Nr.	Material Designation	Materialbezeichnung	Symbol Symbol
120.001	10949296	Feeding tape B76 V3	Zuführband B76 V3	
120.002	10581042	Sealing plate	Dichtplatte	
120.003	10801317	Counter plate	Gegenplatte	
120.004	10802018	Stretch support short	Spannsupport kurz	
120.005	10175465	Bearing housing	Lagergehäuse	
120.006	10205883	Radial spher. roller brg 50/90x28-2210-2	Pen.Rollenlager 50/90x28-2210-2RS	
120.007	10844277	Geared motor 0.83 kW, 400 V, 50 Hz	Getriebemotor 0.83 kW, 400 V, 50 Hz	
120.008	11047157	Motor carrier consist of	Motorträger aus	
120.009	10204639	Chain wheel B19Z12B-2	Kettenrad B19Z12B-2	
120.010	10204274	Tension bushing 35	Spannbuchse 35	
120.011	11186128	Feeding tape roll in front B 76	Zuführbandwalze vorne B 76	
120.012	10478062	Washer 10.5-St-200HV	Scheibe 10.5-St-200HV	
120.013	10431840	Hex. nut M10-8	6kt-Mutter M10-8	
120.014	10163094	Bearing housing	Lagergehäuse	
120.015	10258855	Washer 6.4-St-200HV	Scheibe 6.4-St-200HV	
120.016	10259079	Hex. screw M6x12	6kt-Schraube M6x12	
120.017	10204276	Tension bushing 50	Spannbuchse 50	
120.018	10175485	Washer 12,5/58 x 5	Scheibe 12,5/58 x 5	
120.019	10259092	Hex. screw M10x25	6kt-Schraube M10x25	
120.020	10259340	Parallel key 14x9x45-C45+C	Passfeder 14x9x45-C45+C	
120.021	10204706	Chain wheel B45Z12B-2	Kettenrad B45Z12B-2	
120.022	10175415	Distance sleeve	Distanzbuchse	
120.023	10175381	Bearing cover	Lagerdeckel	
120.024	10243646	Hex. screw M12x80	6kt-Schraube M12x80	
120.025	10832575	Threaded plate	Gewindeplatte	
120.032	10953092	Deflection shaft complete	Umlenkwelle komplett	
120.033	10568235	Adjusting ring A30	Stellring A30	
120.034	10042719	Hex. screw M12x65	6kt-Schraube M12x65	
120.035	10831410	Flange mounting left	Flanschbefestigung links	
120.036	10953539	Feeding tape roll rear	Zuführbandwalze hinten	

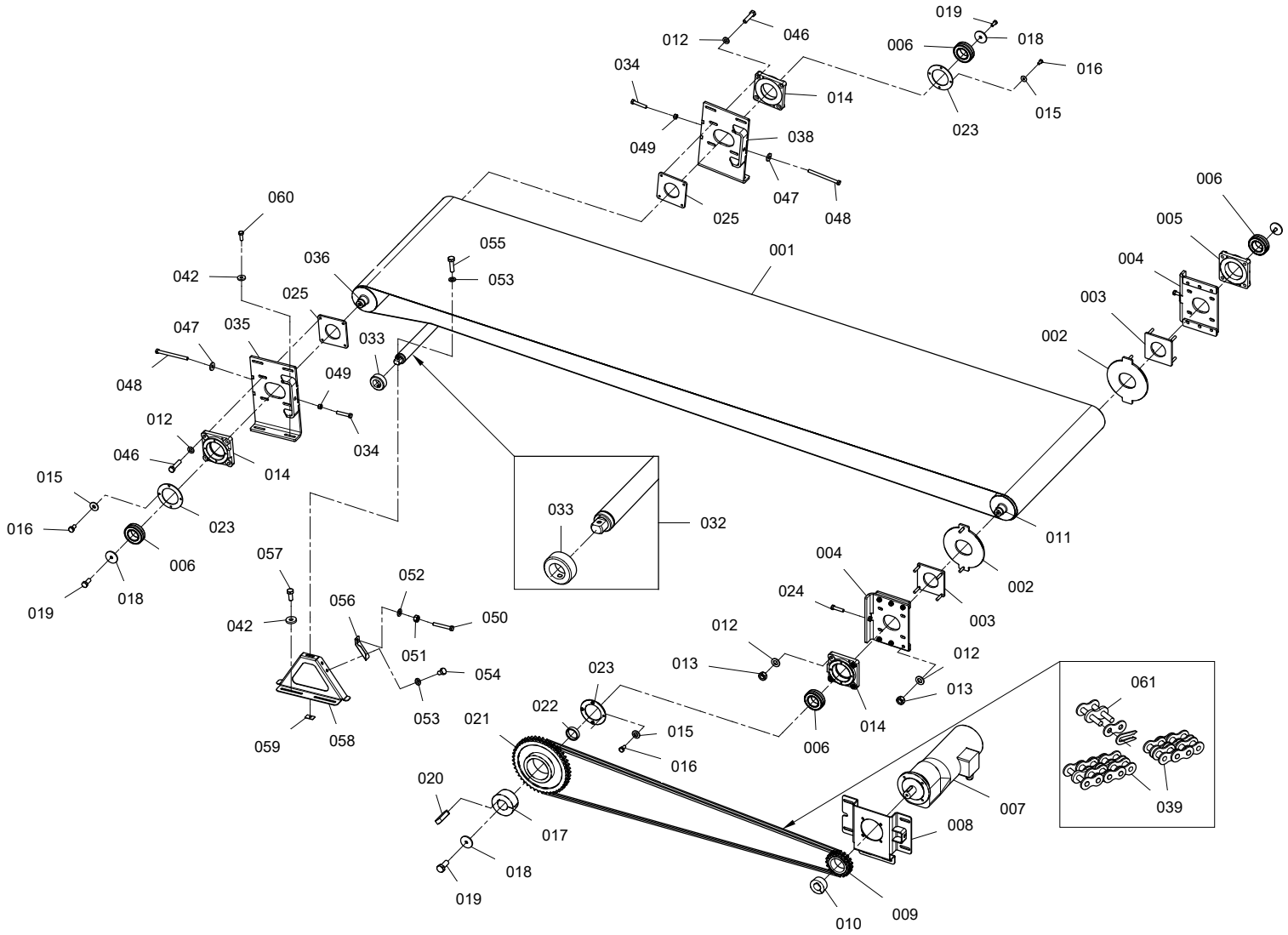

ZED0000000000000000001116128701001_1.svg

Catalog No. Katalog-Nr.	Material no. Material-Nr.	Material Designation	Materialbezeichnung	Symbol Symbol
120.038	10831403	Flange mounting right	Flanschbefestigung rechts	
120.039	10206061	Roller chain 12B-2x95	R-Kette 12B-2x95	
120.042	10355982	Washer 8.4	Scheibe 8.4	
120.046	10491433	Hex. screw M10x45	6kt-Schraube M10x45	
120.047	10678596	Washer 13	Scheibe 13	
120.048	10257741	Hex. screw M12x150	6kt-Schraube M12x150	
120.049	10431841	Hex. nut M12-8	6kt-Mutter M12-8	
120.050	10490981	Hex. screw M8x60	6kt-Schraube M8x60	
120.051	10259607	Hex. nut M8-8	6kt-Mutter M8-8	
120.052	10478061	Washer 8.4-St-200HV	Scheibe 8.4-St-200HV	
120.053	10580160	Washer 8.4-St-200HV	Scheibe 8.4-St-200HV	
120.054	10259083	Hex. screw M8x12	6kt-Schraube M8x12	
120.055	10259087	Hex. screw M8x30	6kt-Schraube M8x30	
120.056	10830650	Angle	Winkel	
120.057	10259085	Hex. screw M8x20	6kt-Schraube M8x20	
120.058	10814946	Axle support	Achshalter	
120.059	10840708	Plate	Platte	
120.060	10497843	Hex. screw M8x22	6kt-Schraube M8x22	
120.061	0901-1540	Chain link E-12B-2	Kettenglied E-12B-2	

B 76

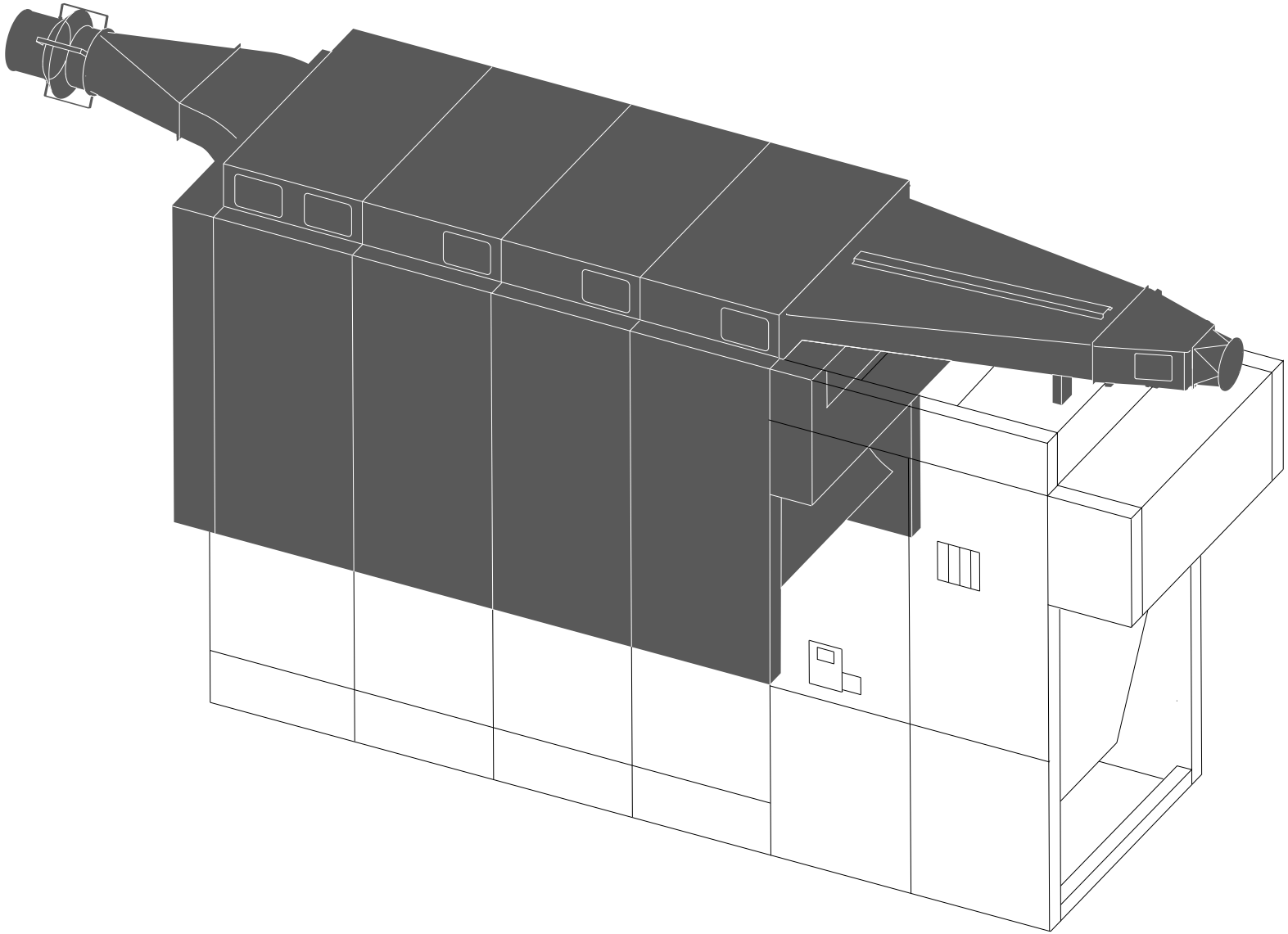

ZNP000000000000001000067826501000_1.svg

Serial No./Serien-Nr. : 40021587-243...244 | Date/Datum : 19.09.2021

B 76

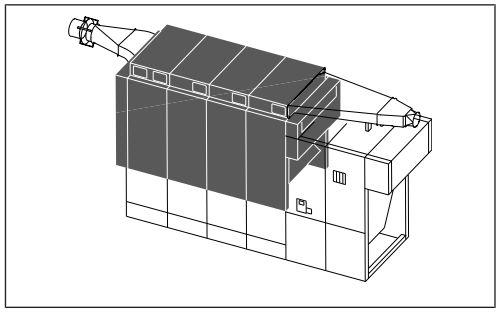

210

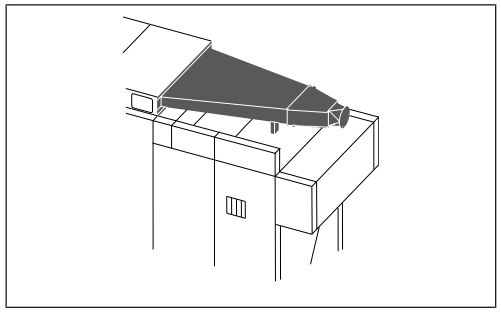

220

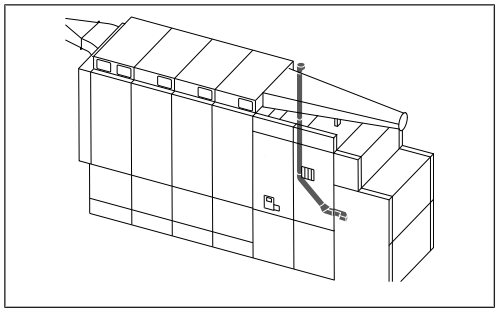

240

B 76

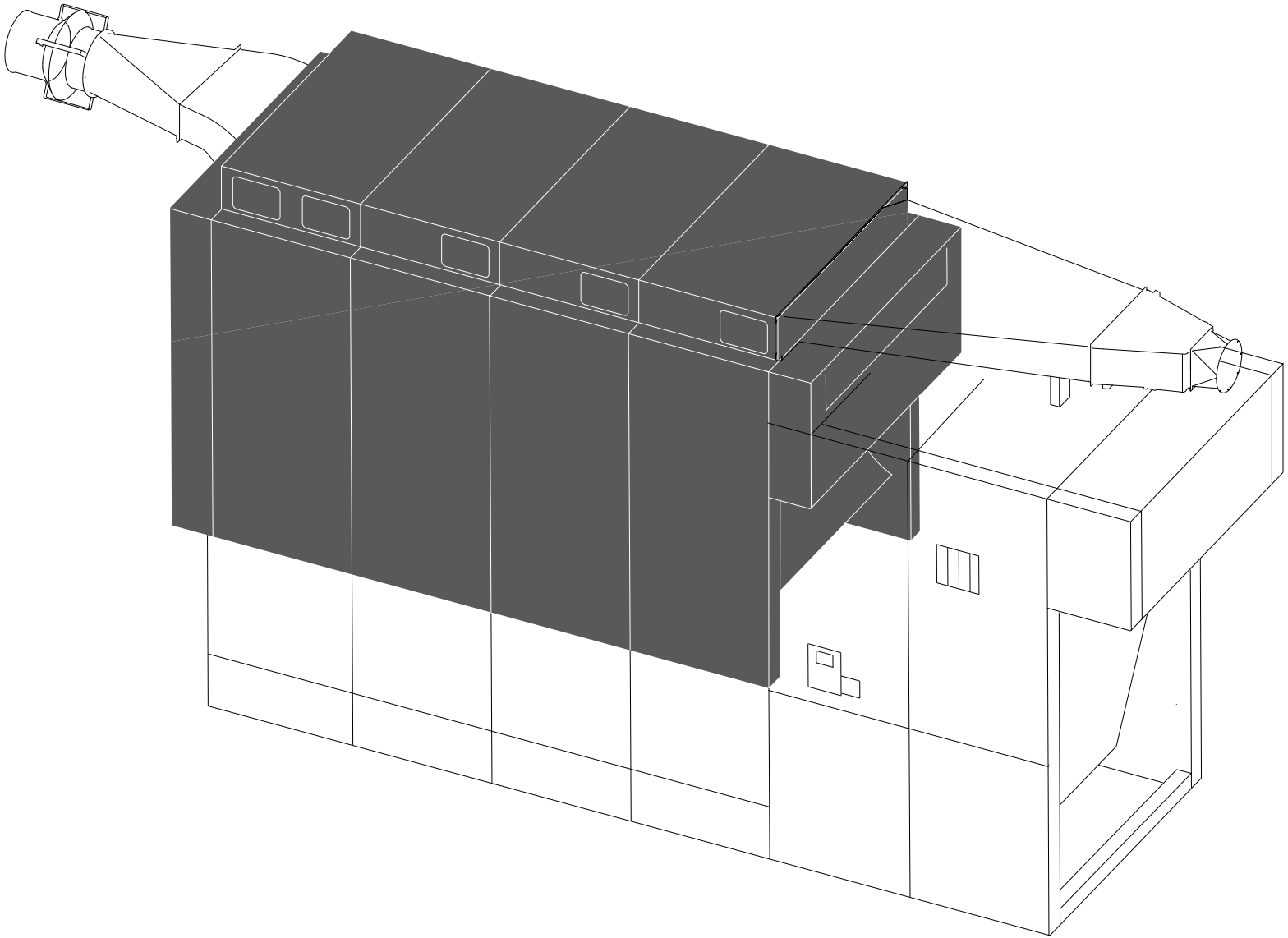

ZNP000000000000001000067826701000_1.svg

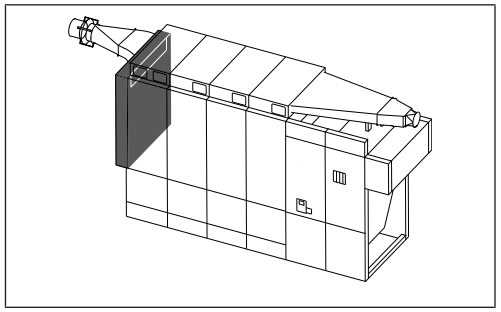

21010

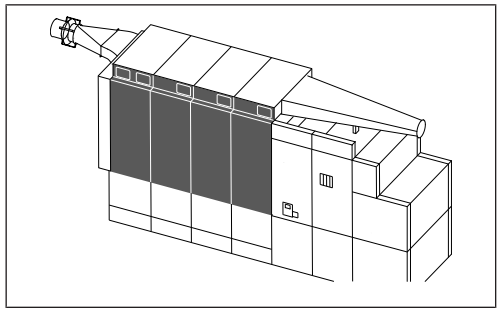

21020

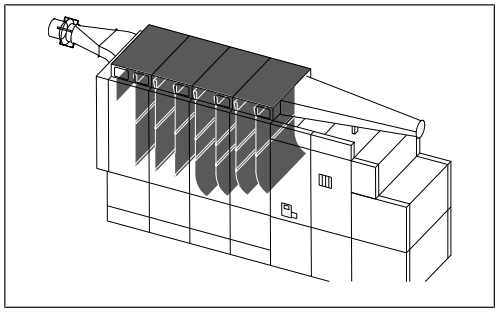

21030

B 76

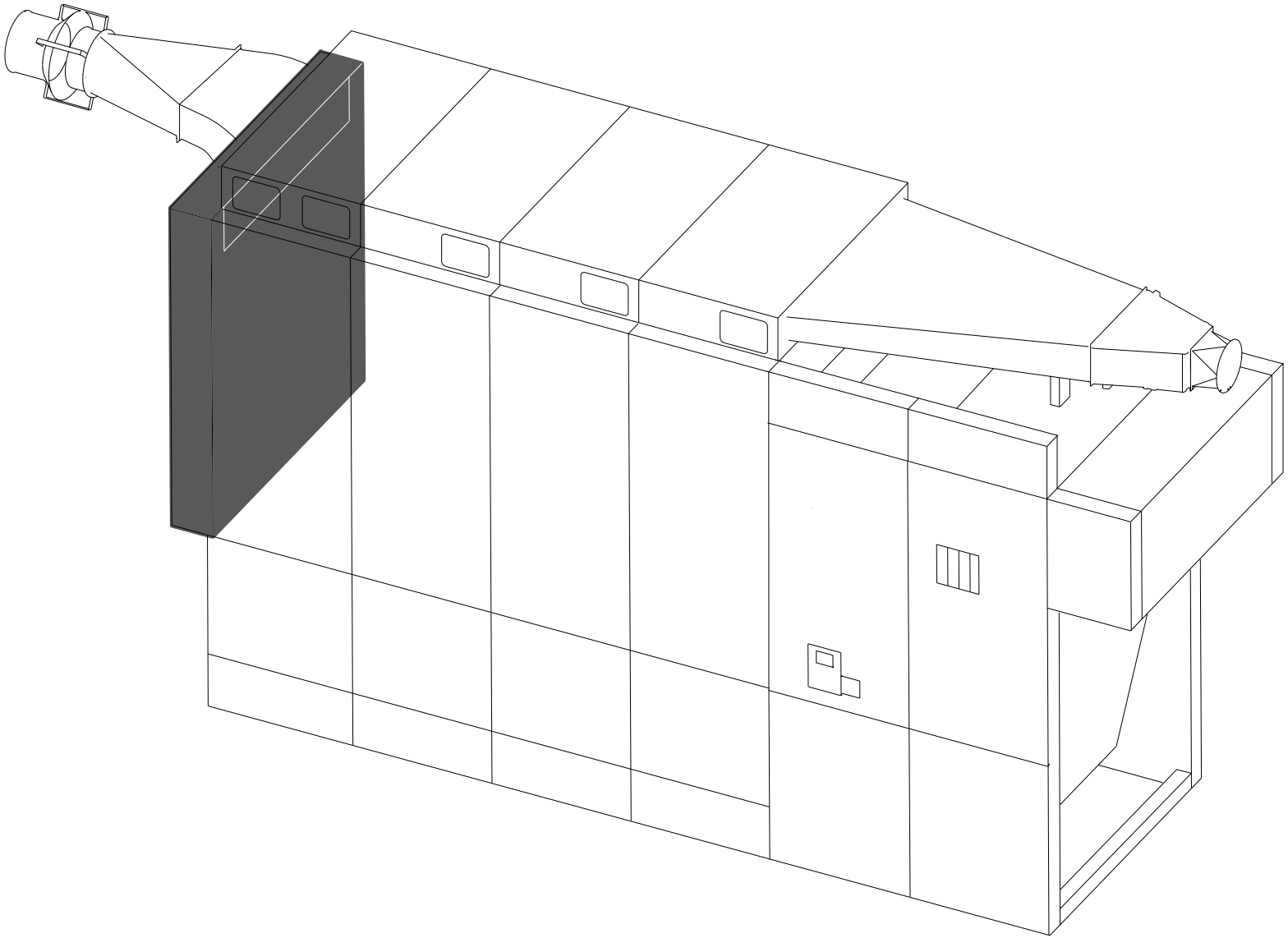

ZNP000000000000001000067807301000_1.svg

B 76

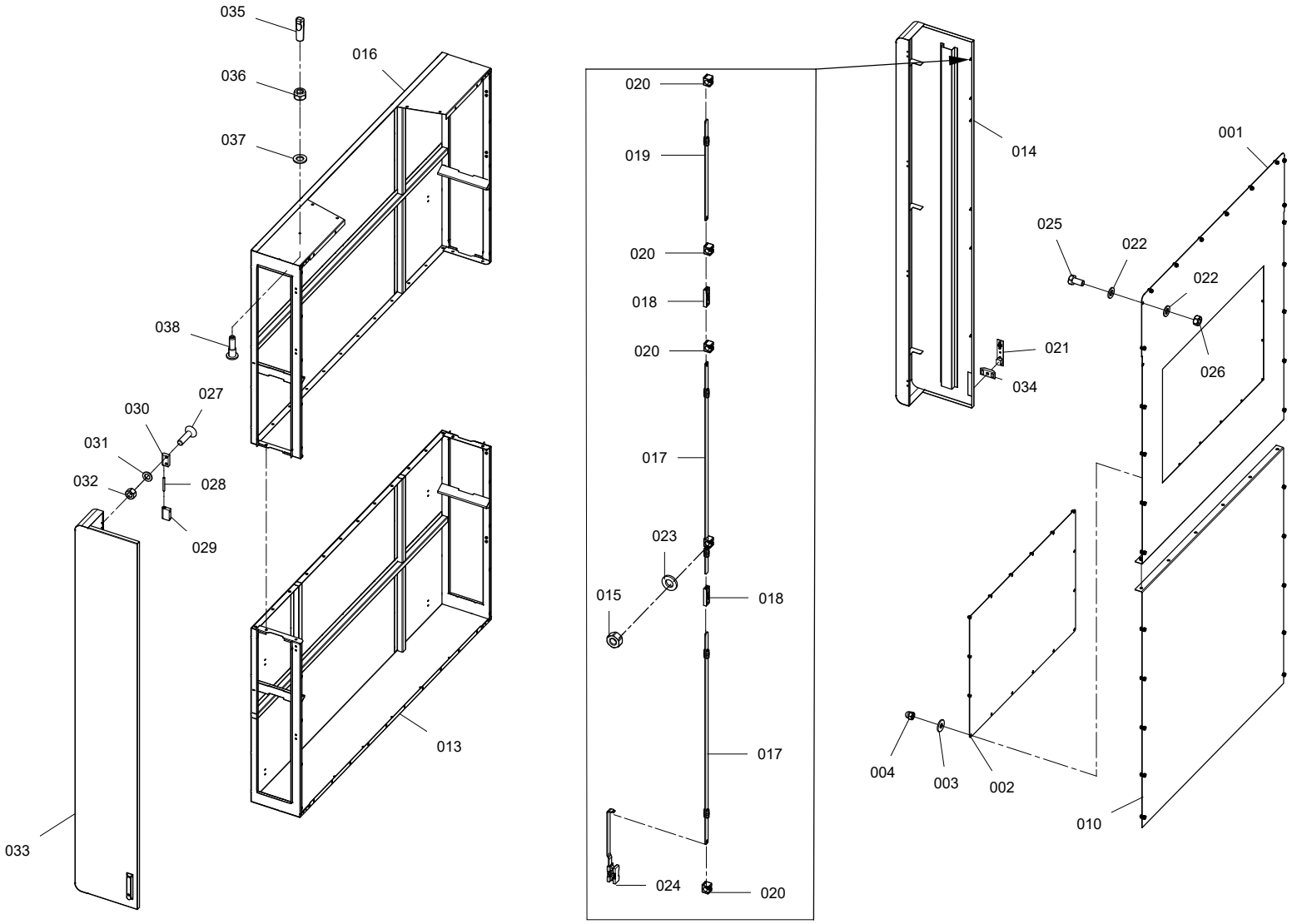

ZED0000000000000000001116129001002_1.svg

Catalog No. Katalog-Nr.	Material no. Material-Nr.	Material Designation	Materialbezeichnung	Symbol Symbol
21010.001	10962172	Rear wall rear 1	Rückwand hinten 1	
21010.002	10179920	Exhaust air sieve 2	Abluftsieb 2	
21010.003	10258855	Washer 6.4-St-200HV	Scheibe 6.4-St-200HV	
21010.004	10354155	Cap nut M6-6	6kt-Hutmutter M6-6	
21010.010	10962214	Rear wall rear 2	Rückwand hinten 2	
21010.013	10957255	Exhaust air channel rear 2	Abluftkanal hinten 2	
21010.014	10919971	Back door consist of R	Hecktür aus R	
21010.015	10431759	Hex. nut M6-8	6kt-Mutter M6-8	
21010.016	10957236	Exhaust air channel rear	Abluftkanal hinten	
21010.017	10848422	Rod 676.5	Stange 676.5	
21010.018	10836568	Junction	Verbindungsstück	
21010.019	10831279	Rod 276.5	Stange 276.5	
21010.020	10831301	Rod guide	Stangenführung	
21010.021	10831206	Handle black 8	Griff schwarz 8	
21010.022	10478061	Washer 8.4-St-200HV	Scheibe 8.4-St-200HV	
21010.023	10456142	Washer 6.4-St-200HV	Scheibe 6.4-St-200HV	
21010.024	10939430	Pole lock	Stangenschloss	
21010.025	10259084	Hex. screw M8x16	6kt-Schraube M8x16	
21010.026	10259607	Hex. nut M8-8	6kt-Mutter M8-8	
21010.027	10845883	Socket flat head screw M5x20	Senkschraube M5x20	
21010.028	10707303	Pin 6x58	Stift 6x58	
21010.029	10493535	Hinge black	Scharnier schwarz	
21010.030	10493537	Hinge black	Scharnier schwarz	
21010.031	10259623	Washer 5.3-St-200HV	Scheibe 5.3-St-200HV	
21010.032	10259463	Hex. nut M5-8	6kt-Mutter M5-8	
21010.033	10918988	Back door consist of L	Hecktür aus L	
21010.034	10836567	Fastening bow	Befestigungsbügel	
21010.035	11158908	Rubber grommet	Gummistutzen	
21010.036	10480506	Hex. nut M8-6	6kt-Mutter M8-6	
21010.037	10580160	Washer 8.4-St-200HV	Scheibe 8.4-St-200HV	

B 76

RIETER

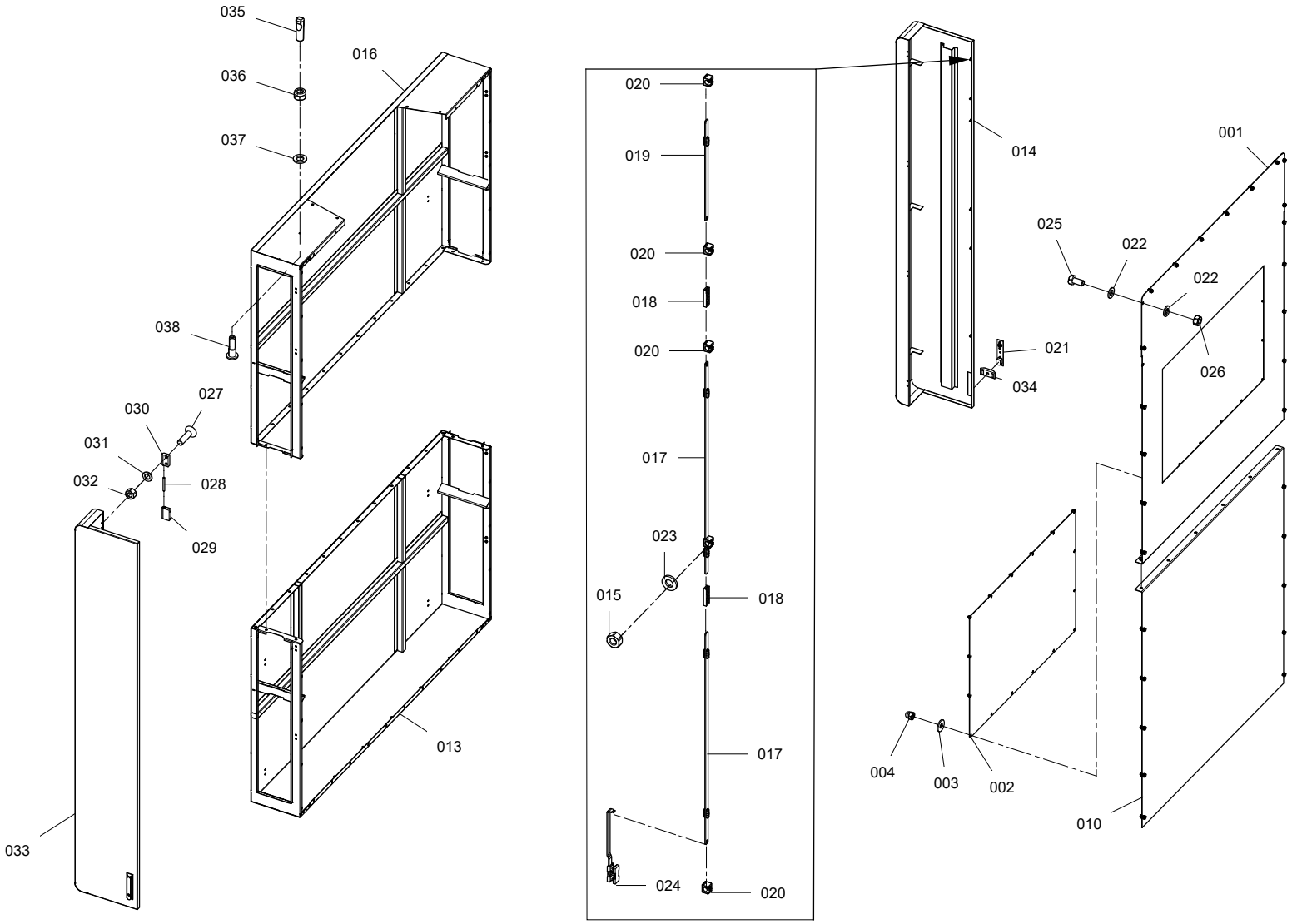

ZED0000000000000000001116129001002_1.svg

Customer
Blessed Textiles Ltd Unit 4, 56984

Catalog No. Katalog-Nr.	Material no. Material-Nr.	Material Designation	Materialbezeichnung	Symbol Symbol
21010.038	10429893	Hook-up nipple	Anschlussnippel	

B 76

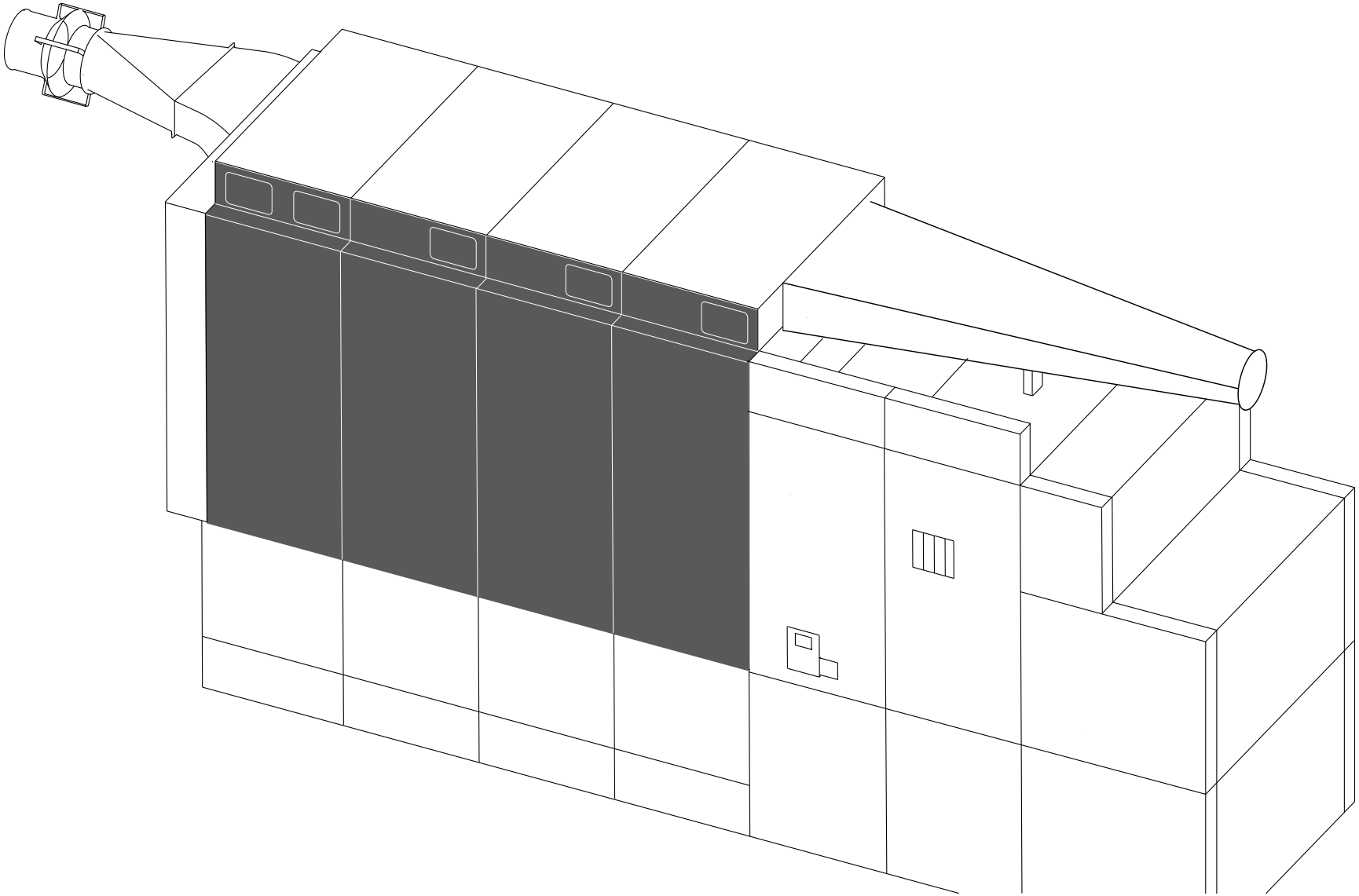

ZNP0000000000000001000067807501000_1.svg

B 76

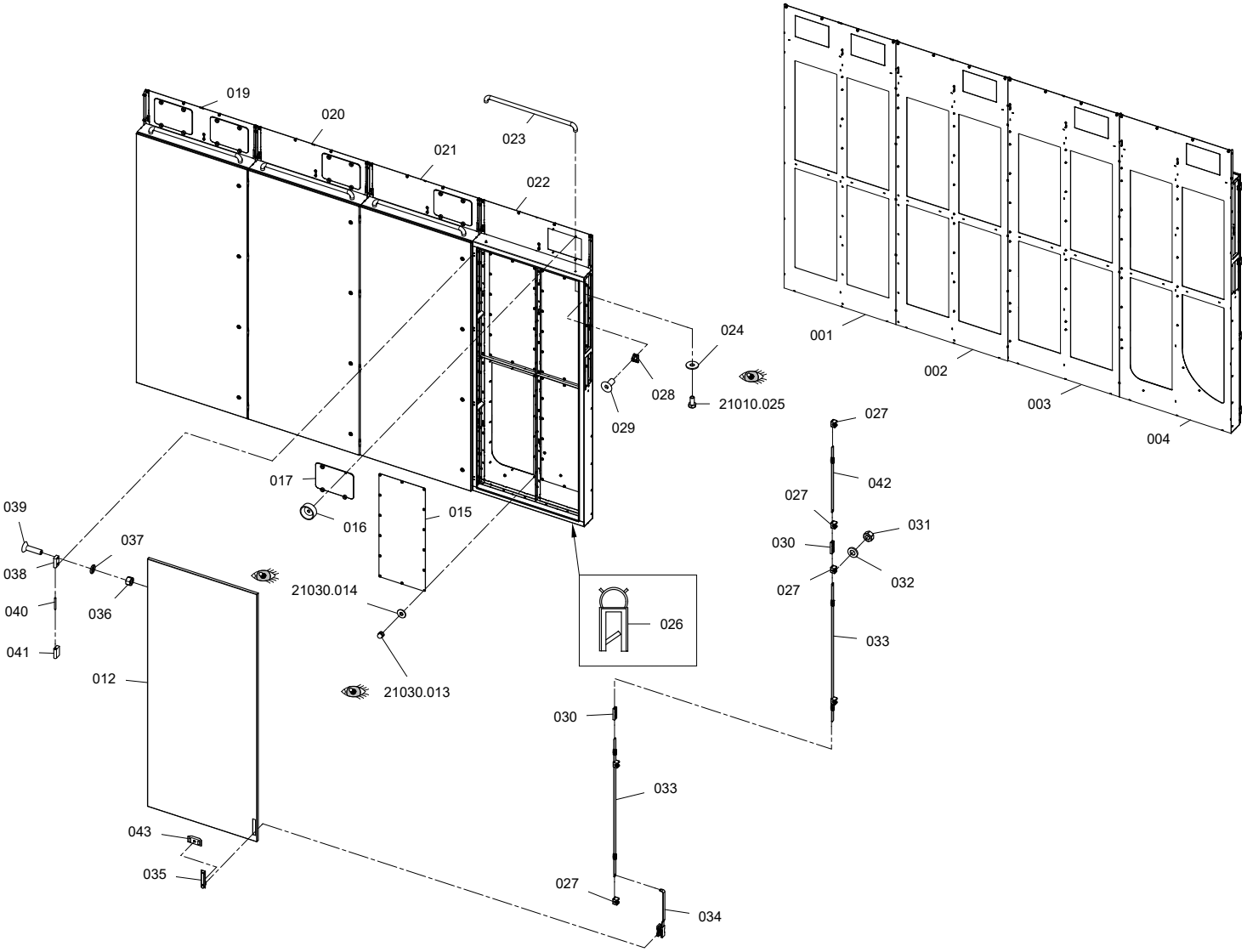

ZED0000000000000000001116130201002_1.svg

Customer
Blessed Textiles Ltd Unit 4, 56984

RIETER

Catalog No. Katalog-Nr.	Material no. Material-Nr.	Material Designation	Materialbezeichnung	Symbol Symbol
21020.001	10926238	Exhaust air channel consist of R MO 4	Abluftkanal aus R MO 4	
21020.002	10926236	Exhaust air channel consist of R MO 3	Abluftkanal aus R MO 3	
21020.003	10926258	Exhaust air channel consist of R MO 2	Abluftkanal aus R MO 2	
21020.004	10926255	Exhaust air channel consist of R MO1	Abluftkanal aus R MO1	
21020.012	10916378	Door complete	Tür komplett	
21020.015	11221155	Exhaust air sieve	Abluftsieb	
21020.016	10563427	Knurled nut M6-A	Rändelmutter M6-A	
21020.017	10004221	Window complete	Fenster komplett	
21020.019	10926239	Exhaust air channel consist of L MO 4	Abluftkanal aus L MO 4	
21020.020	10926240	Exhaust air channel consist of L MO 3	Abluftkanal aus L MO 3	
21020.021	10926246	Exhaust air channel consist of L MO2	Abluftkanal aus L MO2	
21020.022	10926252	Exhaust air channel consist of L MO1	Abluftkanal aus L MO1	
21020.023	10205350	Bow handle red 800	Bügelgriff rot 800	
21020.024	10356696	Washer 8.4-St-200HV	Scheibe 8.4-St-200HV	
21020.026	10615460	Profile 20x11-EPDM	Profil 20x11-EPDM	
21020.027	10831301	Rod guide	Stangenführung	
21020.028	10836566	Rod guide	Stangenführung	
21020.029	10415190	Socket flat head screw M6x14	Senkschraube M6x14	
21020.030	10836568	Junction	Verbindungsstück	
21020.031	10431759	Hex. nut M6-8	6kt-Mutter M6-8	
21020.032	10456142	Washer 6.4-St-200HV	Scheibe 6.4-St-200HV	
21020.033	10848422	Rod 676.5	Stange 676.5	
21020.034	10939430	Pole lock	Stangenschloss	
21020.035	10831206	Handle black 8	Griff schwarz 8	
21020.036	10259463	Hex. nut M5-8	6kt-Mutter M5-8	
21020.037	10259623	Washer 5.3-St-200HV	Scheibe 5.3-St-200HV	
21020.038	10493537	Hinge black	Scharnier schwarz	
21020.039	10845883	Socket flat head screw M5x20	Senkschraube M5x20	
21020.040	10707303	Pin 6x58	Stift 6x58	
21020.041	10493535	Hinge black	Scharnier schwarz	

B 76

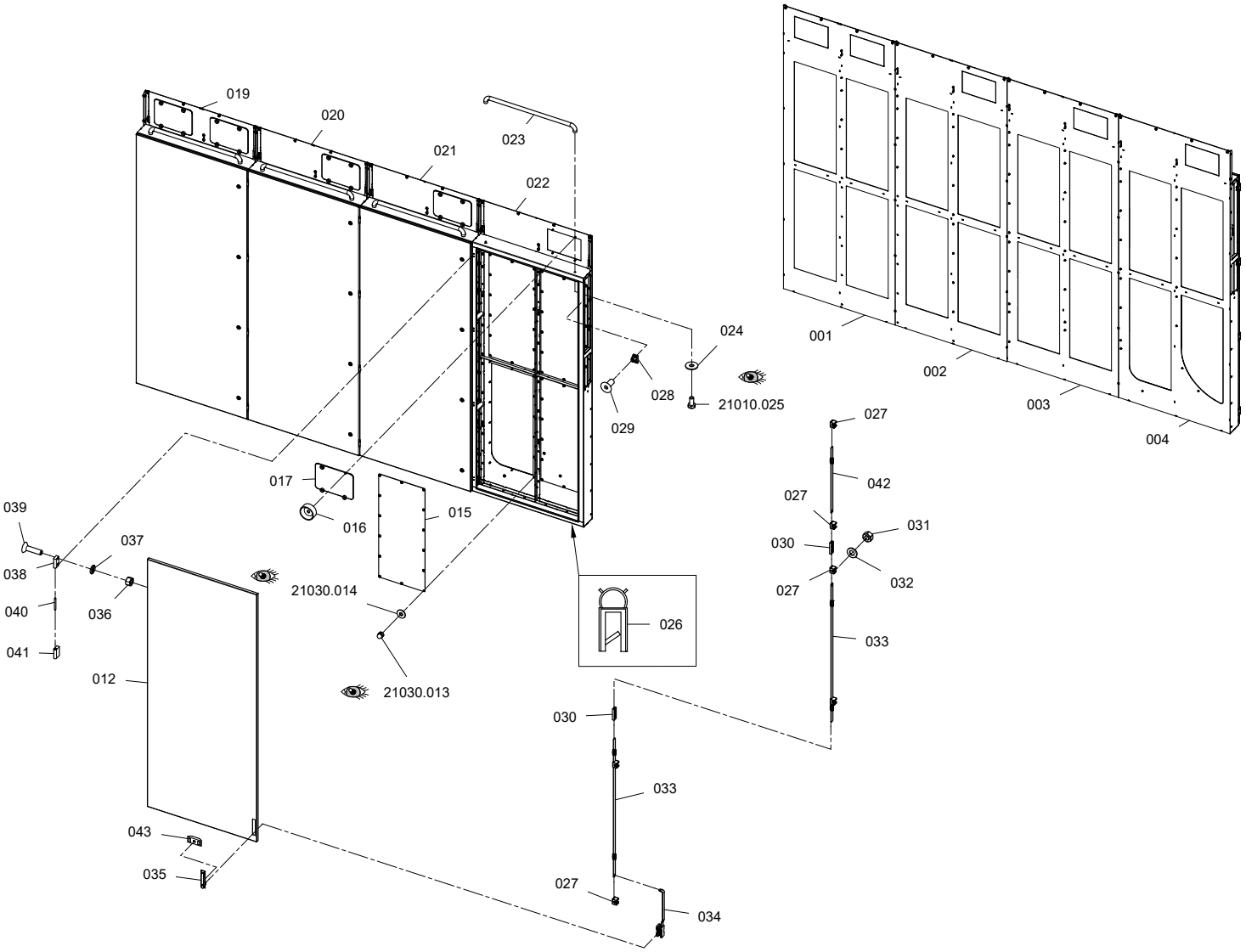

ZED0000000000000000001116130201002_1.svg

Customer
Blessed Textiles Ltd Unit 4, 56984

RIETER

Catalog No. Katalog-Nr.	Material no. Material-Nr.	Material Designation	Materialbezeichnung	Symbol Symbol
21020.042	10831279	Rod 276.5	Stange 276.5	
21020.043	10836567	Fastening bow	Befestigungsbügel	

B 76

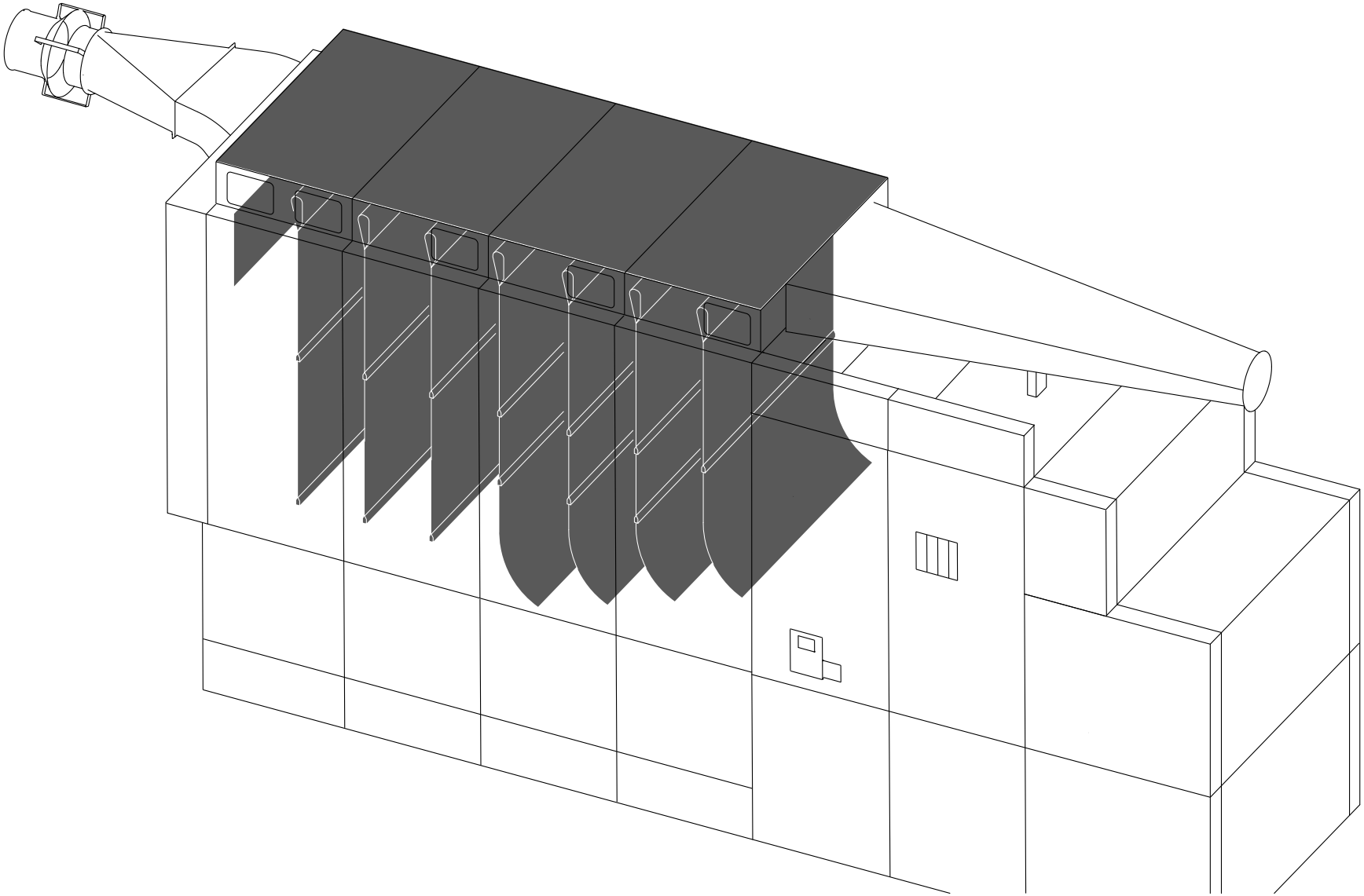

ZNP000000000000001000067807701000_1.svg

B 76

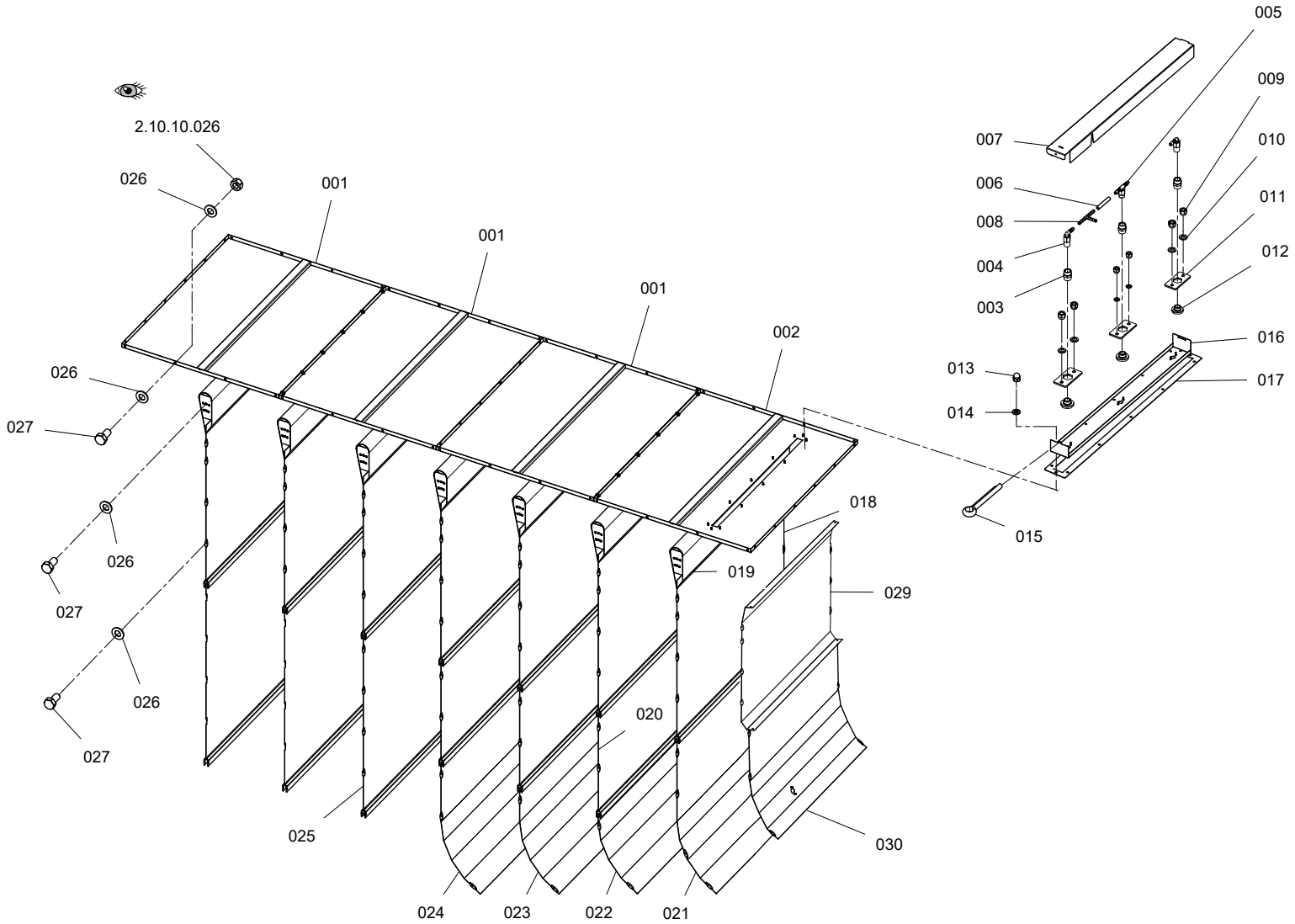

ZED0000000000000000001116130401002_1.svg

Customer
Blessed Textiles Ltd Unit 4, 56984

RIETER

Catalog No. Katalog-Nr.	Material no. Material-Nr.	Material Designation	Materialbezeichnung	Symbol Symbol
21030.001	10178367	Cover plate consist of 2+3+4	Deckplatte aus 2+3+4	
21030.002	10178482	Cover plate consist of 1	Deckplatte aus 1	
21030.003	0908-7824	Muff G1/4-G1/4	Muffe G1/4-G1/4	
21030.004	10759786	Connecting angle R1/4	Verbindungswinkel R1/4	
21030.005	10763814	TE-screwed joint R1/4-6	TE-Verschraubung R1/4-6	
21030.006	10715894	Hose 5/1.5-MQ	Schlauch 5/1.5-MQ	
21030.007	10753758	Lid	Deckel	
21030.008	10759838	T-piece 6	T-Stück 6	
21030.009	10588962	Hex. nut M5-8	6kt-Mutter M5-8	
21030.010	10259623	Washer 5.3-St-200HV	Scheibe 5.3-St-200HV	
21030.011	10759853	Tension plate	Spannplatte	
21030.012	10773144	Sound absorber G1/4	Schalldämpfer G1/4	
21030.013	10354155	Cap nut M6-6	6kt-Hutmutter M6-6	
21030.014	10258855	Washer 6.4-St-200HV	Scheibe 6.4-St-200HV	
21030.015	10630013	Linch pin 4x28	Splint 4x28	
21030.016	10736647	Base plate -Camozzi	Grundplatte -Camozzi	
21030.017	10034048	Flat packing	Flachdichtung	
21030.018	10957299	Duct separation wall consist of 1	Schachttrennwand aus 1	
21030.019	10180188	Cam bracket consist of	Nasenwinkel aus	
21030.020	10957416	Duct separation wall consist of 2	Schachttrennwand aus 2	
21030.021	10959106	Deflection special 2	Umlenkung spezial 2	
21030.022	10959093	Deflection consist of 1	Umlenkung aus 1	
21030.023	10959102	Deflection consist of 2	Umlenkung aus 2	
21030.024	10959094	Deflection consist of 3	Umlenkung aus 3	
21030.025	10957411	Duct separation wall consist of 3	Schachttrennwand aus 3	
21030.026	10478061	Washer 8.4-St-200HV	Scheibe 8.4-St-200HV	
21030.027	10259084	Hex. screw M8x16	6kt-Schraube M8x16	
21030.029	10960538	Cape hood infeed	Verdeck Einlauf	
21030.030	10949999	Deflection special 1	Umlenkung spezial 1	

B 76

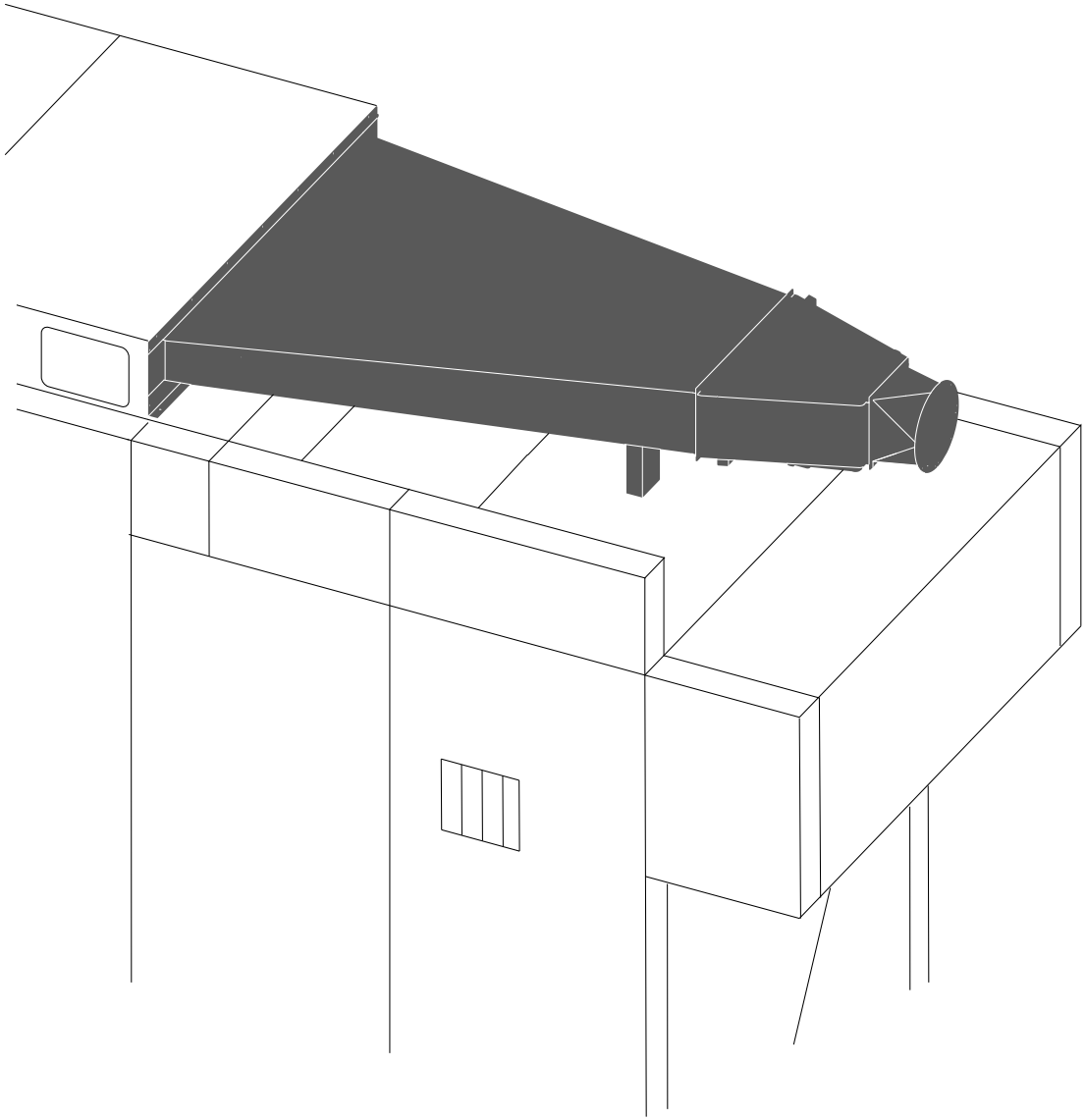

ZNP00000000000000100007152620100 0_1.svg

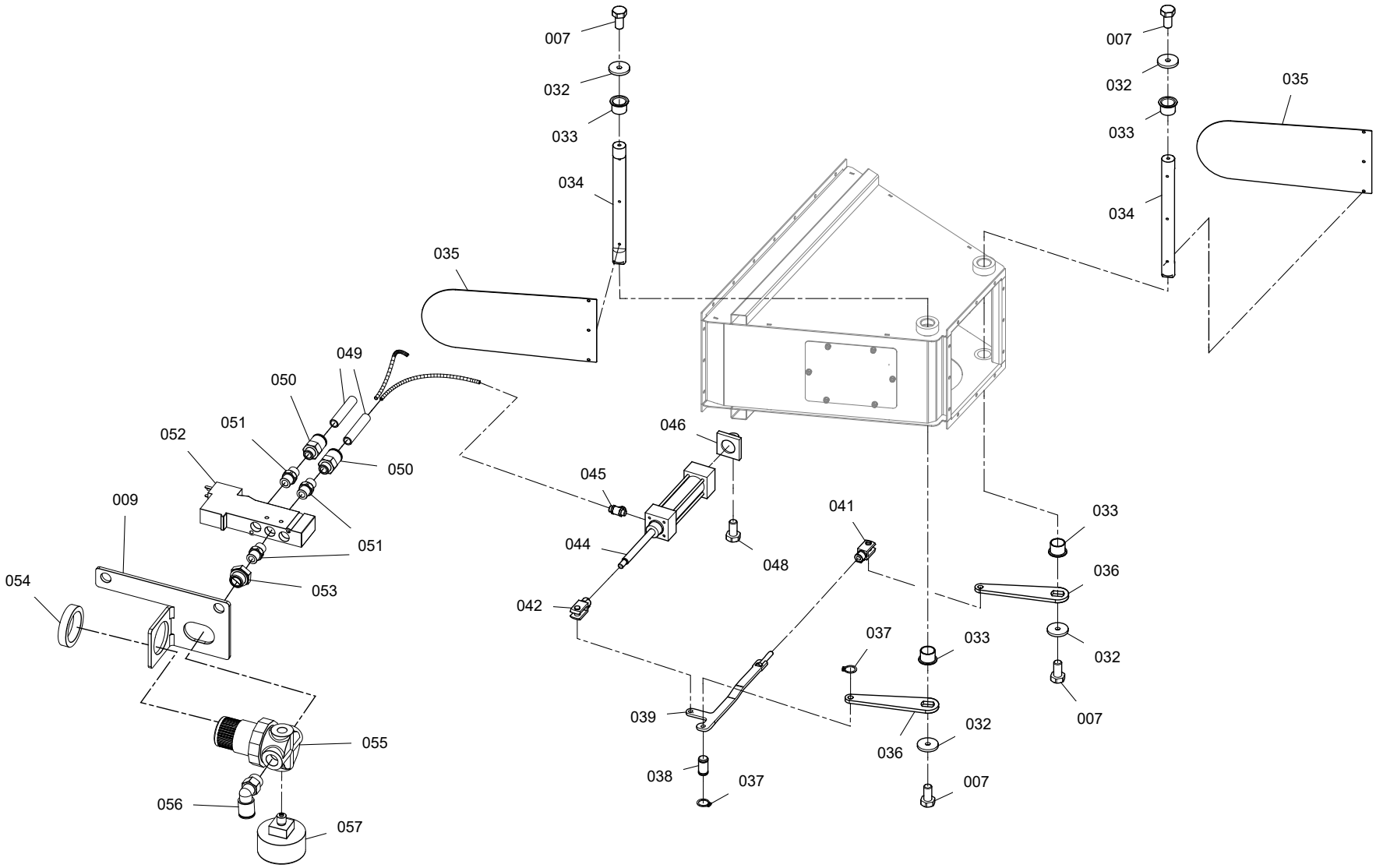

ZED0000000000000000001120322501004_1.svg

Customer
Blessed Textiles Ltd Unit 4, 56984

RIETER

Catalog No. Katalog-Nr.	Material no. Material-Nr.	Material Designation	Materialbezeichnung	Symbol Symbol
220.007	10259084	Hex. screw M8x16	6kt-Schraube M8x16	
220.009	10180091	Valve holder	Ventilhalter	
220.032	0904-7970	Shaft end washer 9/40x5	Vorlegscheibe 9/40x5	
220.033	0900-3551	Flange sleeve 30/34/42x26	Bundbuchse 30/34/42x26	
220.034	11033886	Axle	Achse	
220.035	11034322	Flap 400	Klappe 400	
220.036	10207115	Lever	Hebel	
220.037	10355049	Locking ring 12x1	Sicherungsring 12x1	
220.038	0044-9574	Stud	Bolzen	
220.039	11034375	Junction	Verbindungsstück	
220.041	10701943	Fork head G12x24	Gabelkopf G12x24	
220.042	10315408	Fork head G12x24	Gabelkopf G12x24	
220.044	11151073	Pneu. cylinder dw 40-125	Pn.Zylinder dw 40-125	
220.045	10703976	Throt. relief valve G1/4-8	Drosselrückschlagv. G1/4-8	
220.046	10529781	Swivelling strap 40 ISO/VDMA	Schwenklasche 40 ISO/VDMA	
220.048	0908-7219	Hex.socket head shoulder screw 12x40	Zyl.Passschraube 12x40	
220.049	10530540	Pipe 8/1-PA11,EN	Rohr 8/1-PA11,EN	
220.050	0908-7883	GE-plug connection 8-G1/8	GE-Steckverbindung 8-G1/8	
220.051	0909-9763	Double nipple R1/8	Doppelnippel R1/8	
220.052	0920-9542	5/2 way solenoid Nw4.4 DC24V	5/2-Wege-Magnetventil Nw4.4 DC24V	
220.053	10541334	Reduction nipple G1/4-G1/8	Reduziernippel G1/4-G1/8	
220.054	10847522	Nut M30x1.5	Mutter M30x1.5	
220.055	10444281	Pressure regulator G1/4-0.5...10bar	Druckregler G1/4-0.5...10bar	
220.056	10693504	WE-plug connection 8-G1/4	WE-Steckverbindung 8-G1/4	
220.057	10577902	Pressure gauge G1/8 0...6bar	Manometer G1/8 0...6bar	

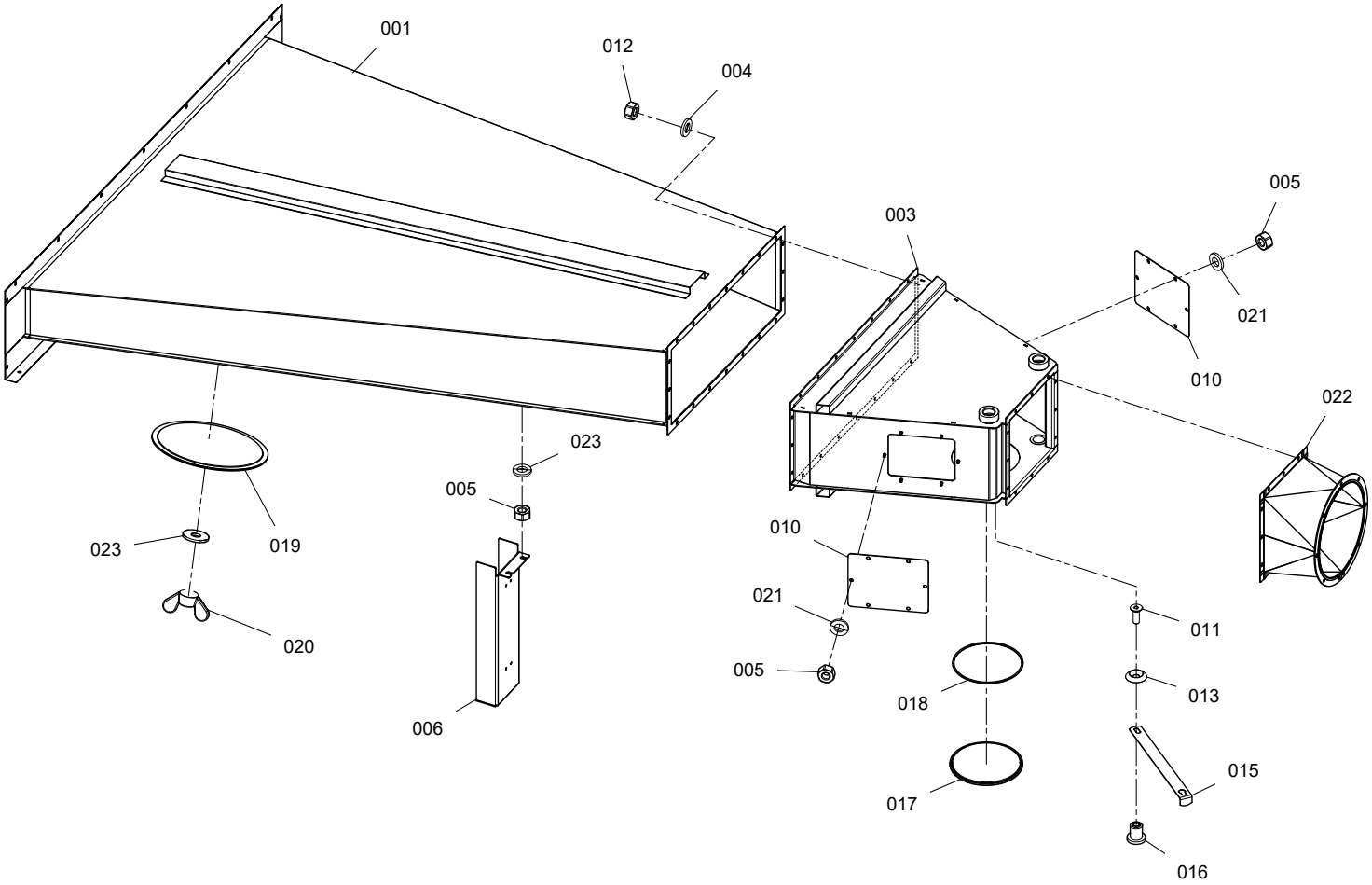

ZED0000000000000000001120322501004_2.svg

Customer
Blessed Textiles Ltd Unit 4, 56984

RIETER

Catalog No. Katalog-Nr.	Material no. Material-Nr.	Material Designation	Materialbezeichnung	Symbol Symbol
220.001	11038204	Feeding channel 400	Speisung Kanal 400	
220.003	11035261	Lid box 400	Klappenkasten 400	
220.004	10478061	Washer 8.4-St-200HV	Scheibe 8.4-St-200HV	
220.005	10431759	Hex. nut M6-8	6kt-Mutter M6-8	
220.006	10963360	Rest	Stütze	
220.010	10207106	Plate	Platte	
220.011	10563425	Socket flat head screw M4x12	Senkschraube M4x12	
220.012	10259607	Hex. nut M8-8	6kt-Mutter M8-8	
220.013	10259465	Washer w. lowering SN213912-4.3/14	Scheibe m. Senkung SN213912-4.3/14	
220.015	0104-2190	Spring bow	Federbügel	
220.016	0100-2051	Stud	Bolzen	
220.017	0104-2170	Window	Fenster	
220.018	0912-2110	Sealing stripe 4/2,5x650	Dichtstreifen 4/2,5x650	
220.019	11120508	Window complete DM400	Fenster komplett DM400	
220.020	10356046	Wing nut M6-GT	Flügelmutter M6-GT	
220.021	10456142	Washer 6.4-St-200HV	Scheibe 6.4-St-200HV	
220.022	11037986	Transition piece 400	Übergangsstück 400	
220.023	10258855	Washer 6.4-St-200HV	Scheibe 6.4-St-200HV	

B 76

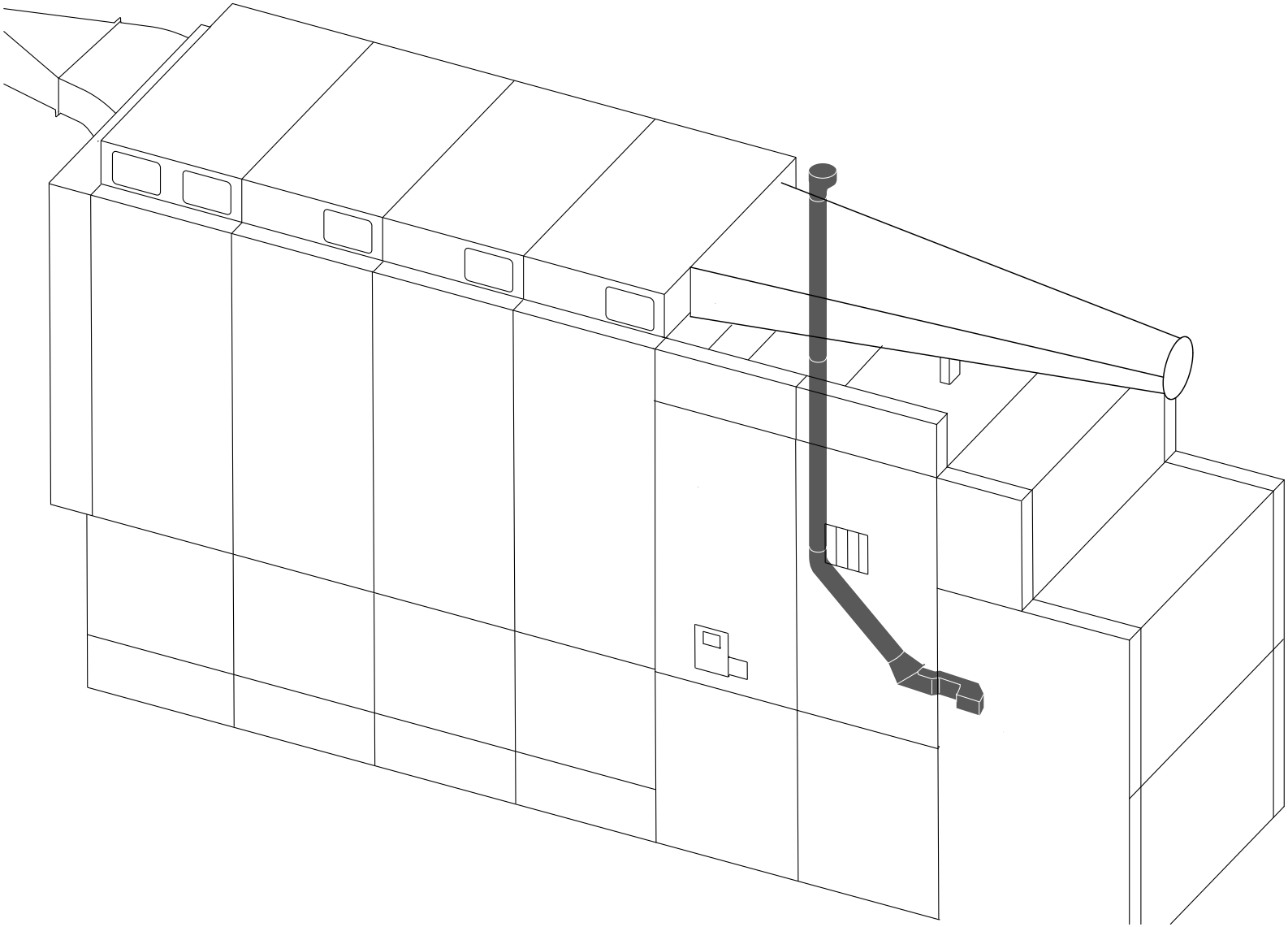

ZNP000000000000001000067808201000_1.svg

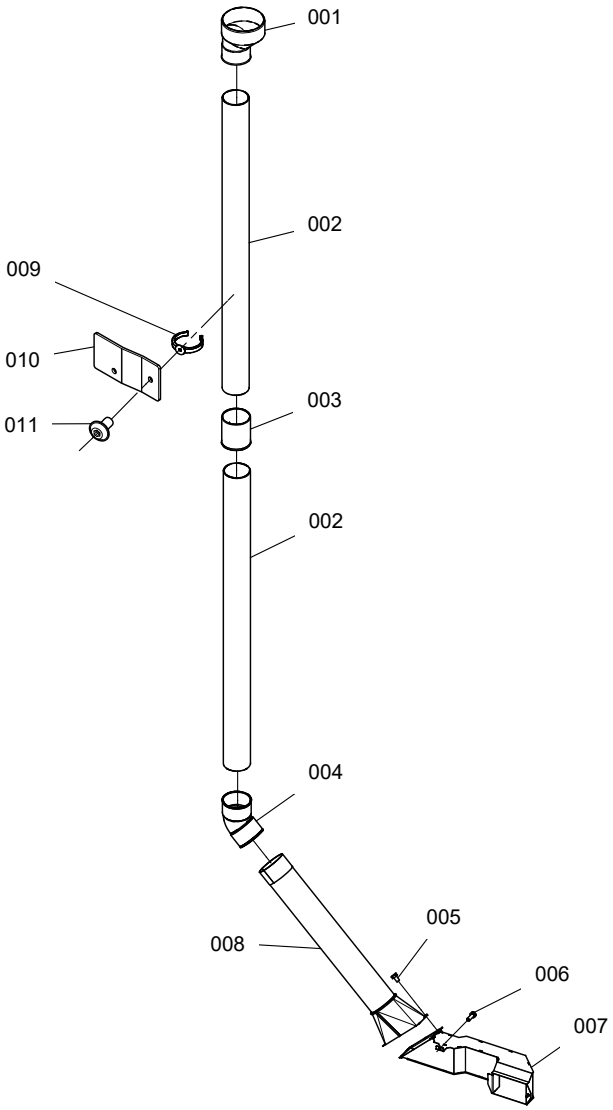

ZED0000000000000000001116130901001_1.svg

Customer
Blessed Textiles Ltd Unit 4, 56984

RIETER

Catalog No. Katalog-Nr.	Material no. Material-Nr.	Material Designation	Materialbezeichnung	Symbol Symbol
240.001	10914526	Reducer pipe 160/90	Drosselrohr 160/90	
240.002	10948475	Pipe long	Rohr lang	
240.003	10914523	Muff	Muffe	
240.004	10914512	Pipe bend 45 D	Rohrbogen 45 D	
240.005	10259078	Hex. screw M6x10	6kt-Schraube M6x10	
240.006	10259080	Hex. screw M6x16	6kt-Schraube M6x16	
240.007	10238882	Suction duct consist of	Absaugkanal aus	
240.008	10907670	Transition piece consist of	Übergangsstück aus	
240.009	10914529	Lock strap 1	Verriegelungslasche 1	
240.010	10720962	Flange	Flansch	
240.011	10114741	Oval head screw flange M6x12	Linsenschraube Flansch M6x12	

B 76

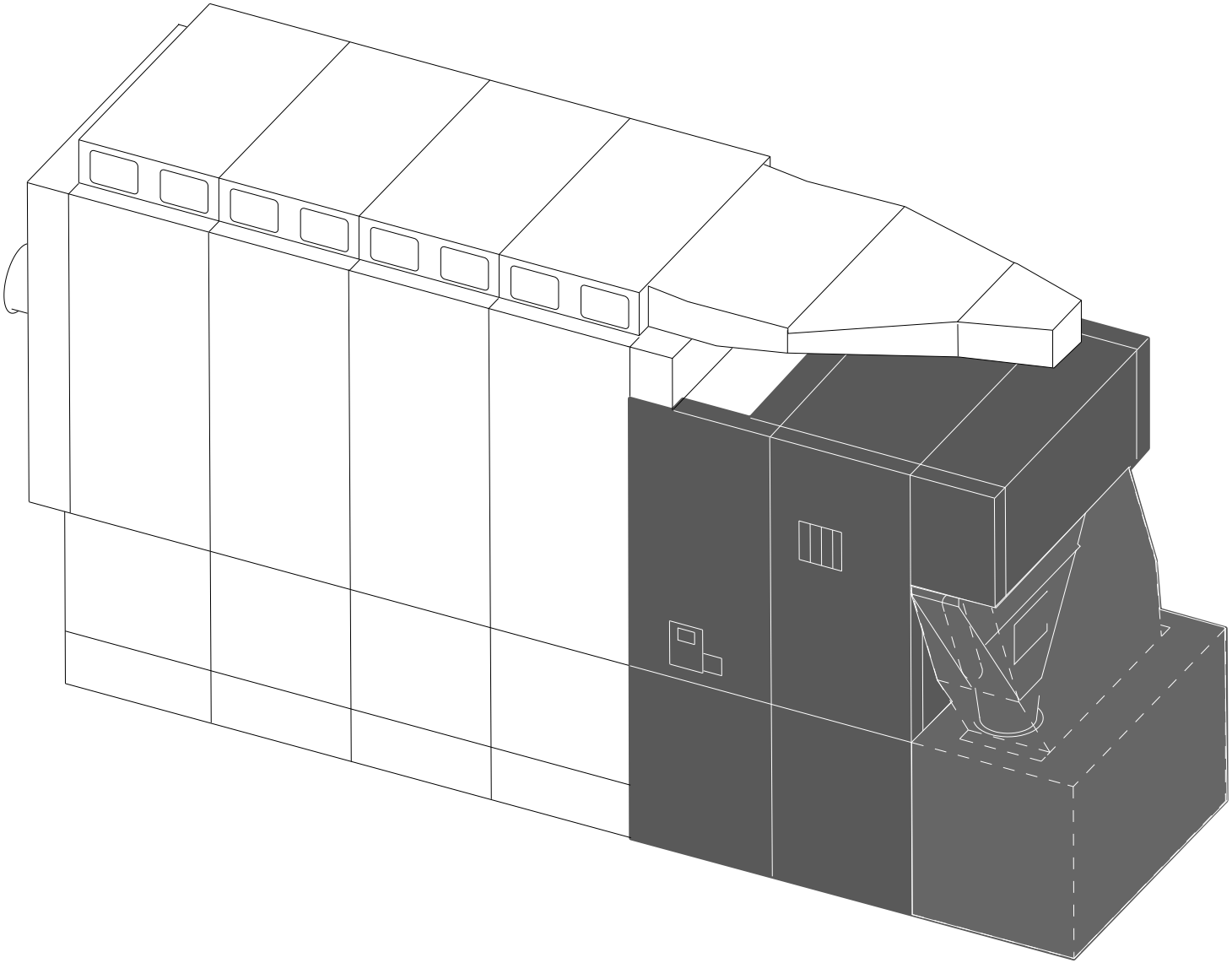

ZNP00000000000000010000678277010 00_1.svg

Serial No./Serien-Nr. : 40021587-243...244 | Date/Datum : 19.09.2021

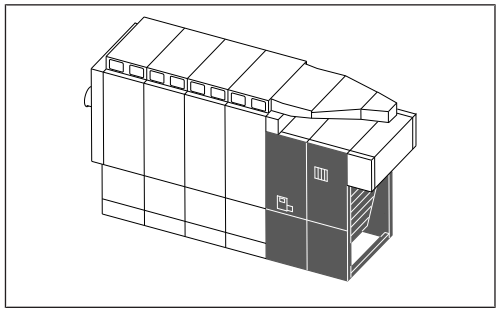

410

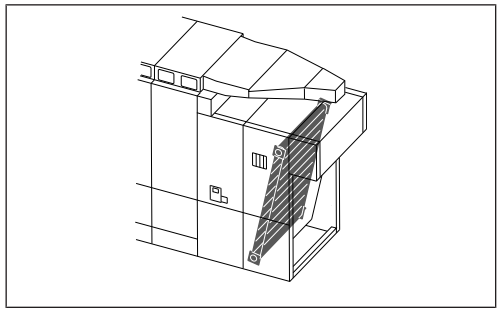

420

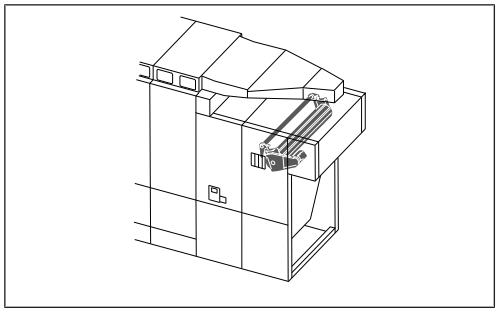

430

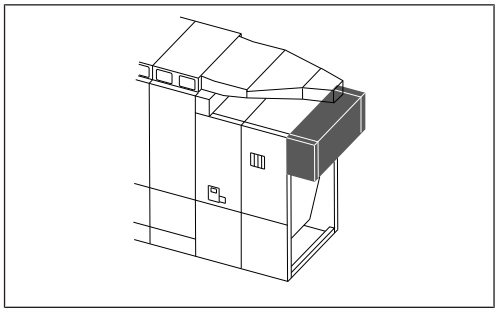

440

B 76

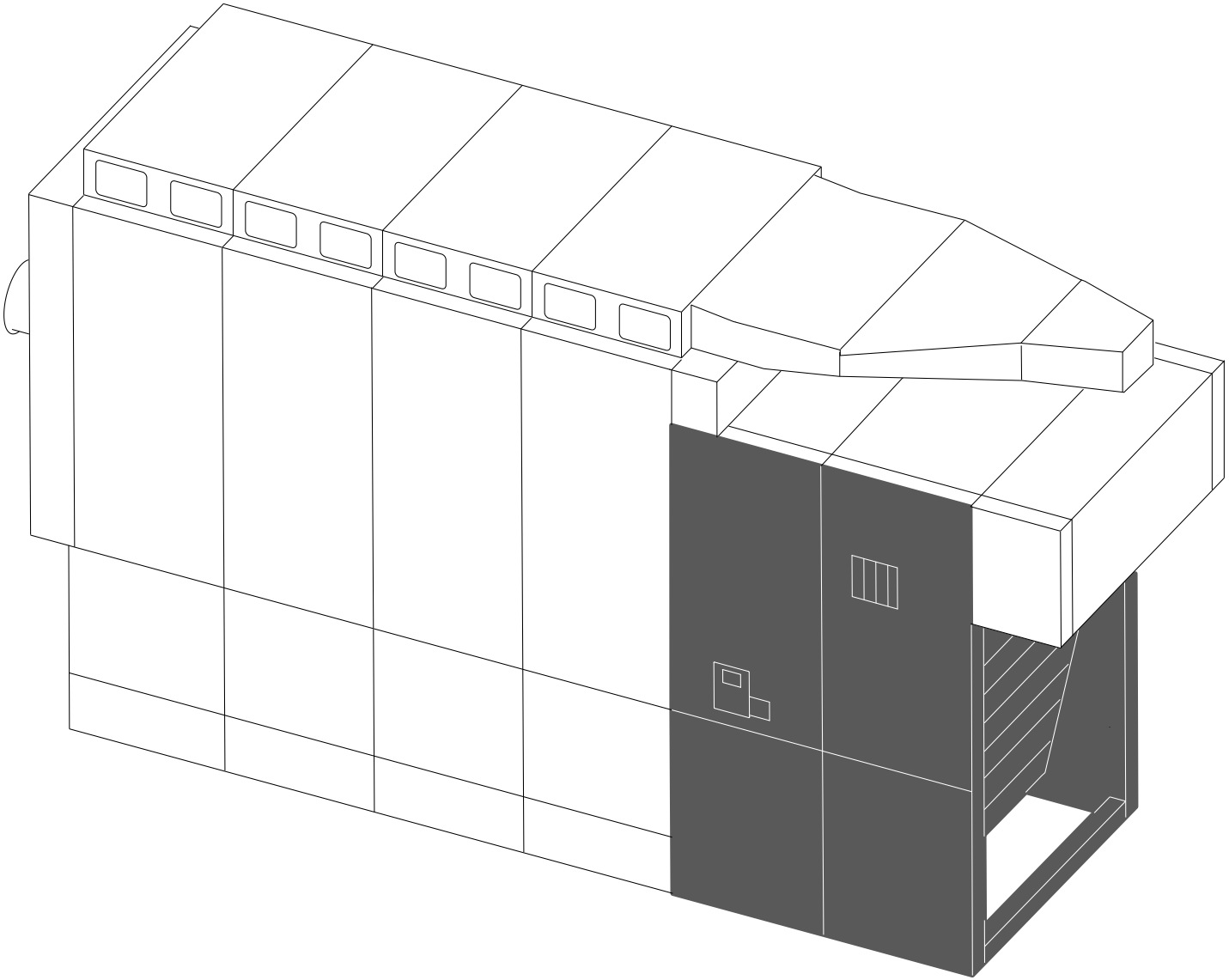

ZNP000000000000001000067828001000_1.svg

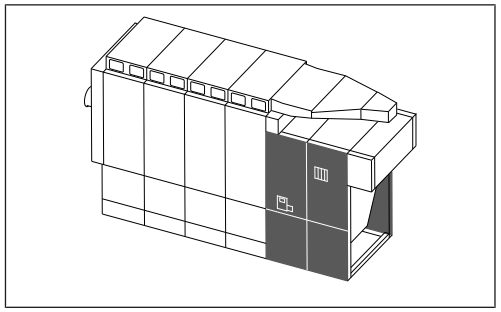

41010

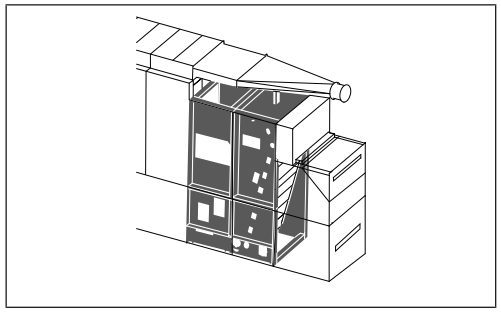

41015

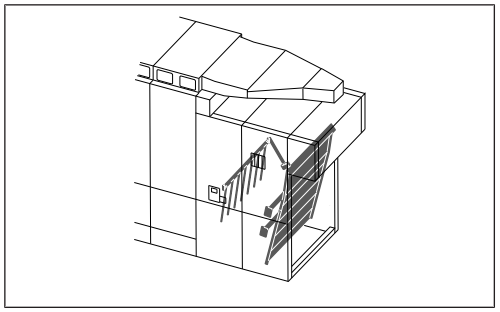

41020

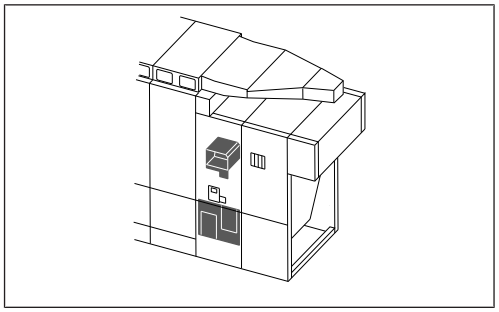

41030

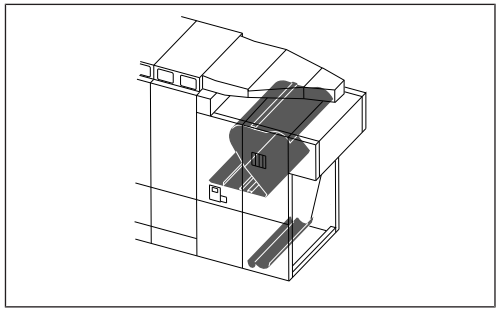

41040

B 76

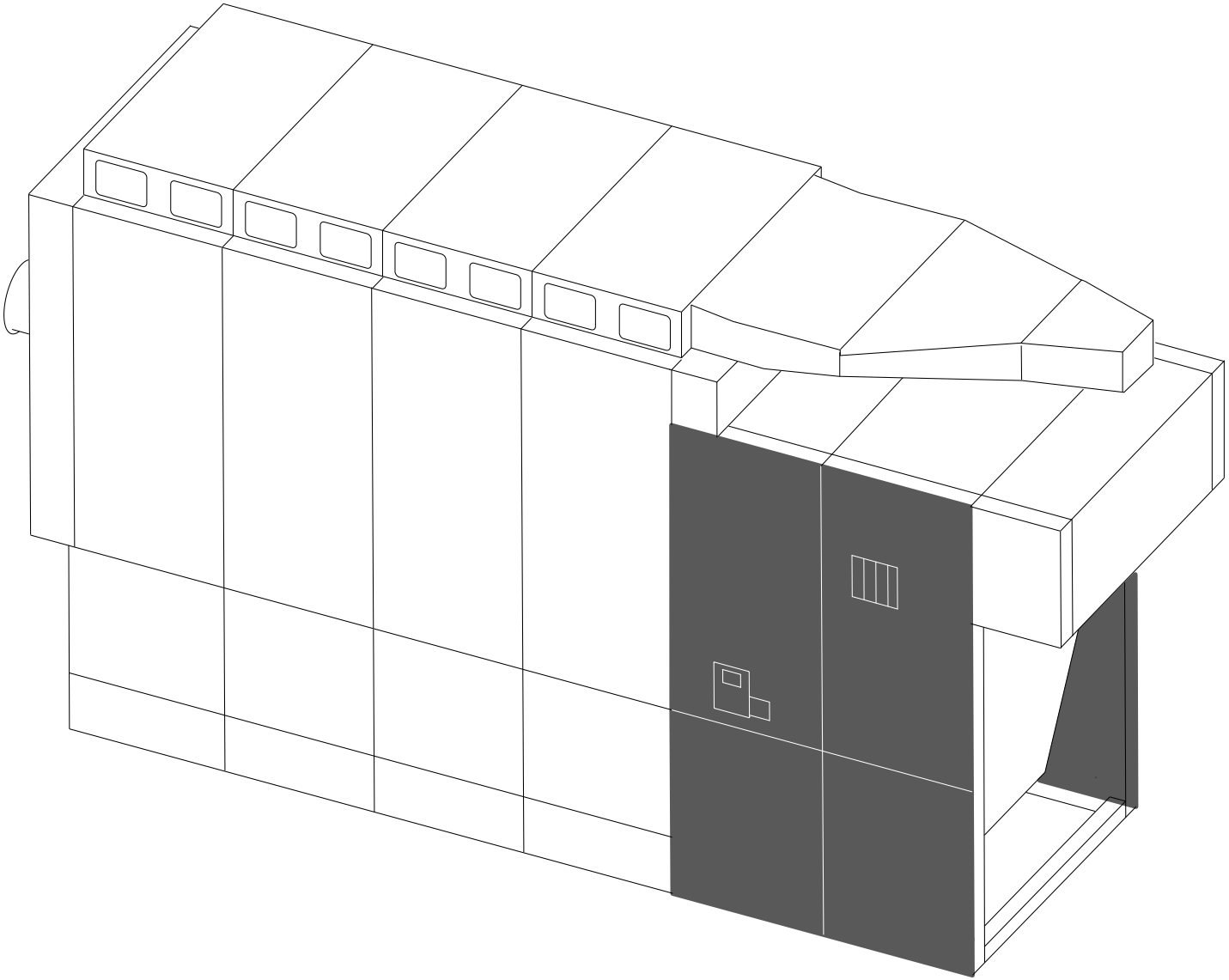

ZNP00000000000000010000678165010 00_1.svg

B 76

RIETER

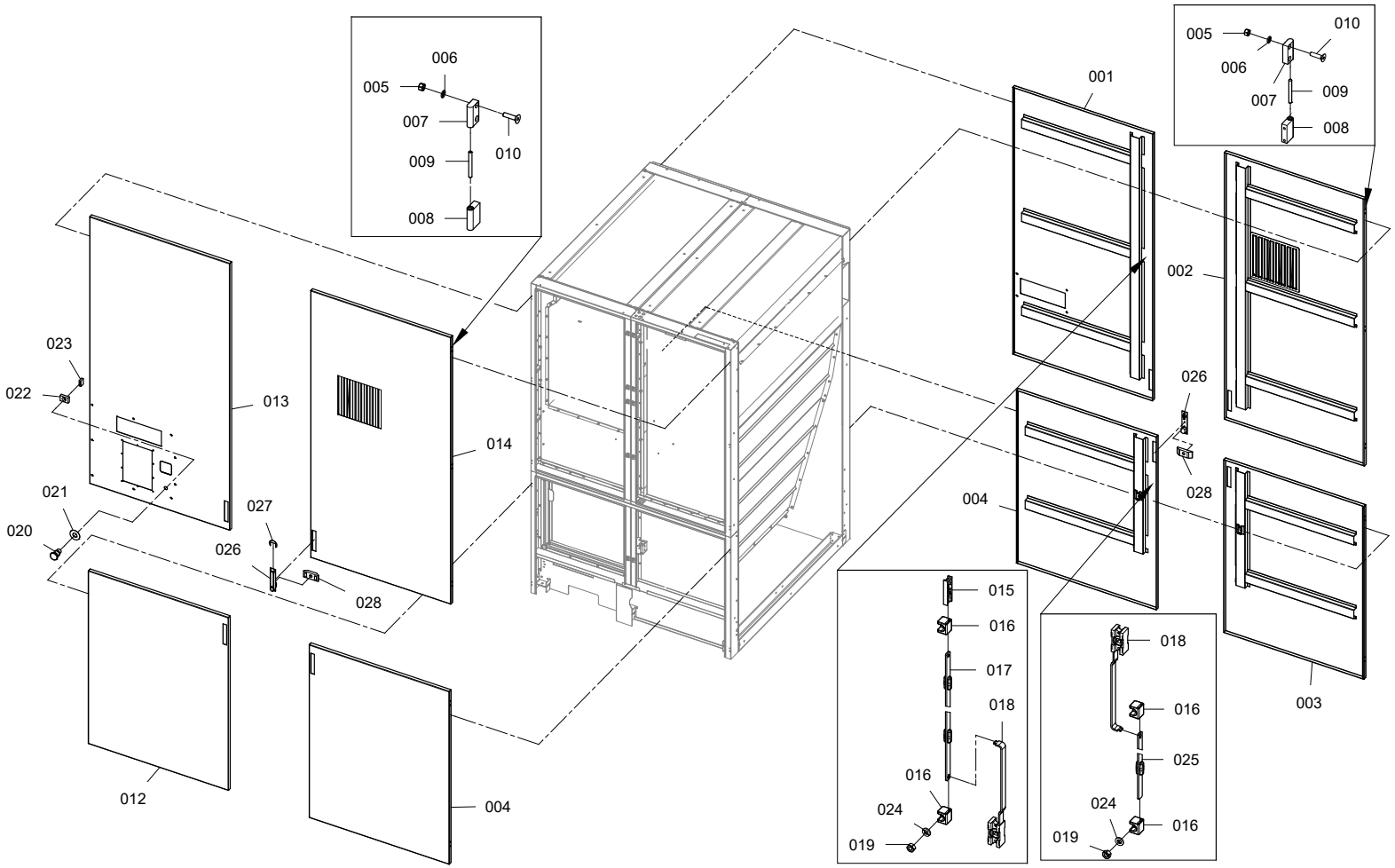

ZED0000000000000000001116081701002_1.svg

Customer
Blessed Textiles Ltd Unit 4, 56984

RIETER

Catalog No. Katalog-Nr.	Material no. Material-Nr.	Material Designation	Materialbezeichnung	Symbol Symbol
41010.001	10853064	Door top	Tür oben	
41010.002	10853067	Door top	Tür oben	
41010.003	10853068	Door below	Tür unten	
41010.004	10853031	Door below	Tür unten	
41010.005	10259463	Hex. nut M5-8	6kt-Mutter M5-8	
41010.006	10259623	Washer 5.3-St-200HV	Scheibe 5.3-St-200HV	
41010.007	10493537	Hinge black	Scharnier schwarz	
41010.008	10493535	Hinge black	Scharnier schwarz	
41010.009	10707303	Pin 6x58	Stift 6x58	
41010.010	10845883	Socket flat head screw M5x20	Senkschraube M5x20	
41010.012	10852968	Door below	Tür unten	
41010.013	10852966	Door top	Tür oben	
41010.014	10852990	Door top	Tür oben	
41010.015	10836568	Junction	Verbindungsstück	
41010.016	10831301	Rod guide	Stangenführung	
41010.017	10848422	Rod 676.5	Stange 676.5	
41010.018	10939430	Pole lock	Stangenschloss	
41010.019	10431759	Hex. nut M6-8	6kt-Mutter M6-8	
41010.020	10107891	Emergency shut-down head locking rt Dm22	Not-Aus-Tasterkopf rastend rt Dm22 Msw	
41010.021	10115880	Warning ring yellow RAL1003 55/22,5	Warnring gelb RAL1003 55/22,5	
41010.022	10031766	Contact Ag 1s1oe Dm22	Kontakt Ag 1s1oe Dm22	
41010.023	10031778	Contact single Ag 1oe Dm22	Kontakt einfach Ag 1oe Dm22	
41010.024	10456142	Washer 6.4-St-200HV	Scheibe 6.4-St-200HV	
41010.025	10831279	Rod 276.5	Stange 276.5	
41010.026	10831206	Handle black 8	Griff schwarz 8	
41010.027	10968396	Lock shield red	Schlossschild rot	
41010.028	10836567	Fastening bow	Befestigungsbügel	

B 76

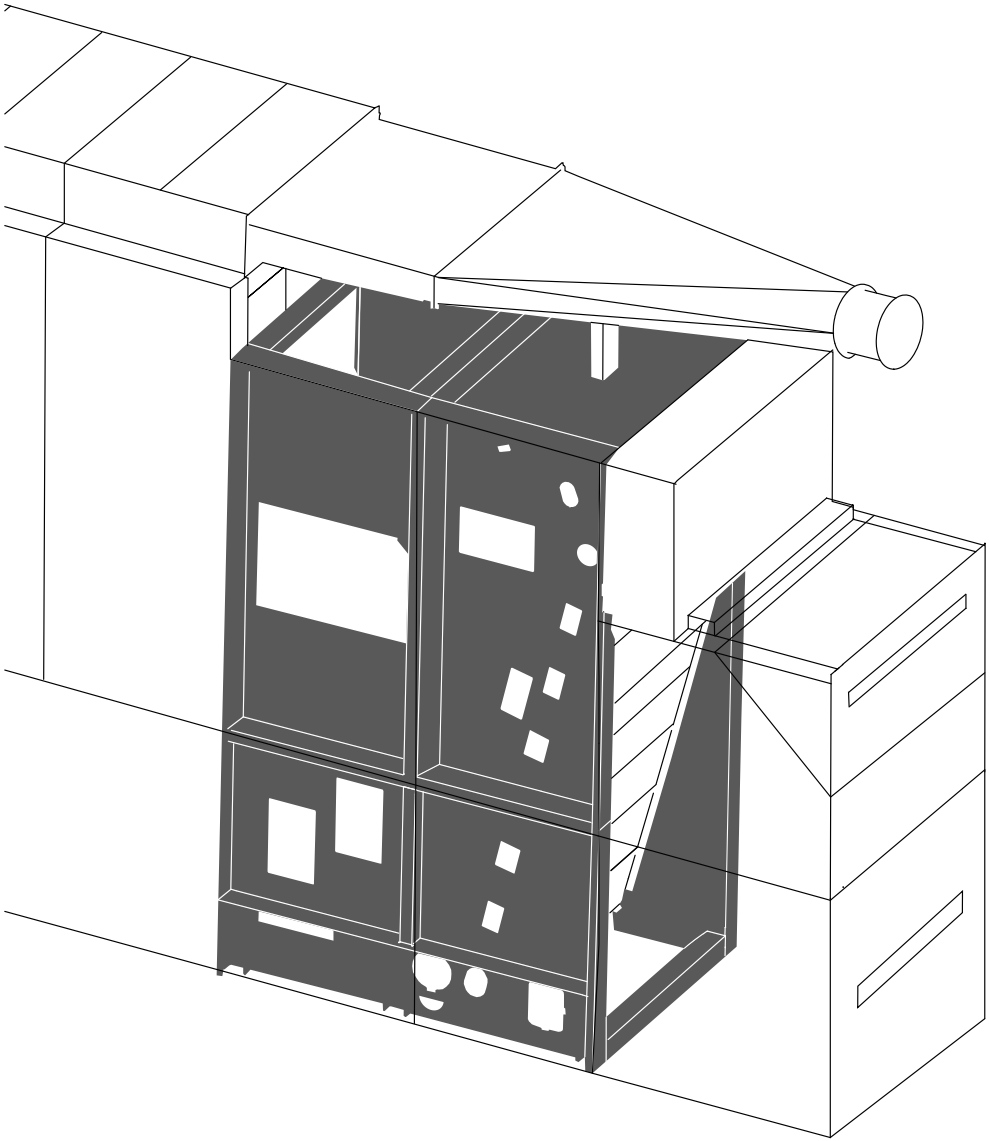

ZNP00000000000000010000678166010 00_1.svg

B 76

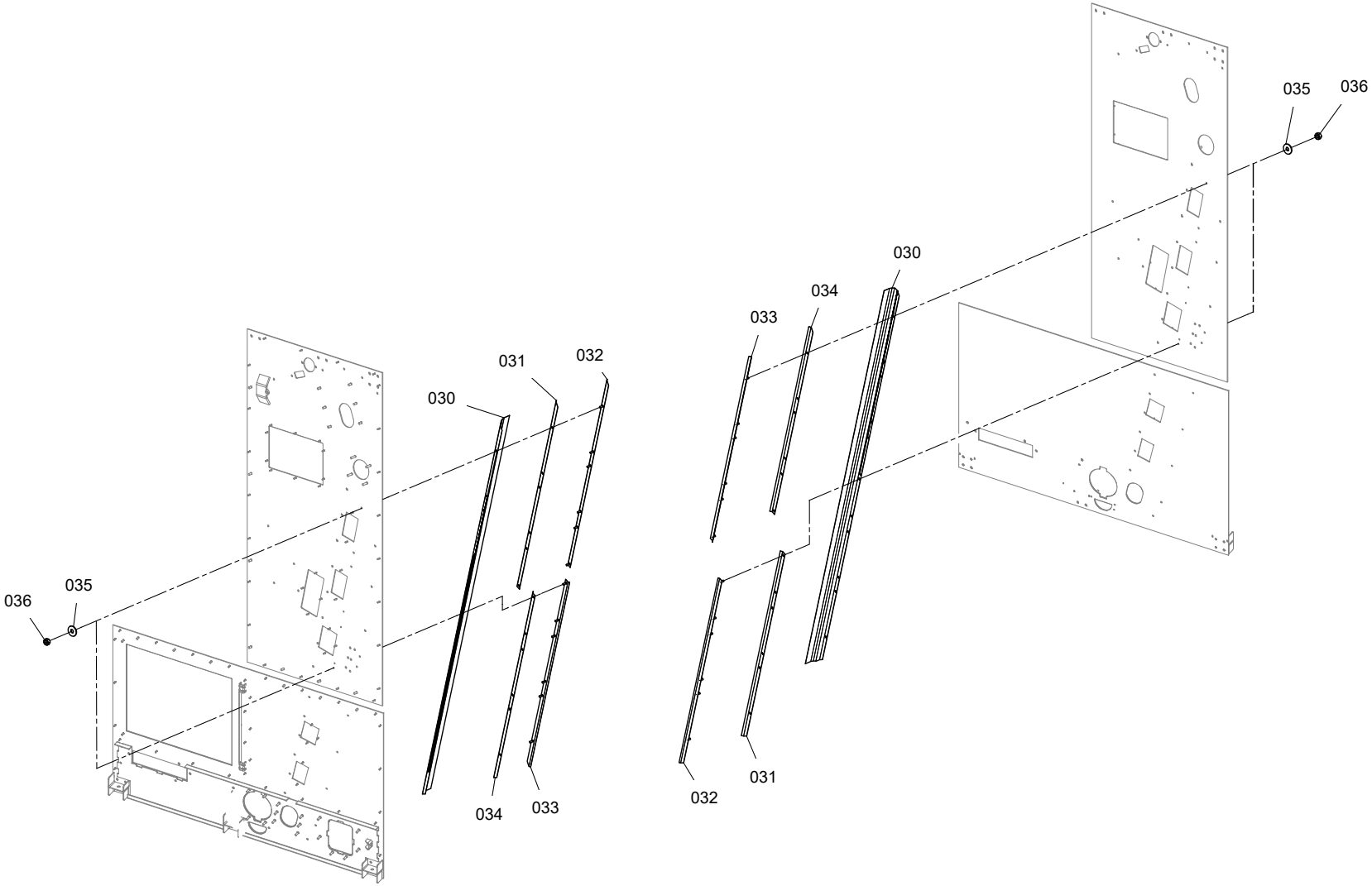

ZED000000000000000001116081801001_1.svg

Customer
Blessed Textiles Ltd Unit 4, 56984

RIETER

Catalog No. Katalog-Nr.	Material no. Material-Nr.	Material Designation	Materialbezeichnung	Symbol Symbol
41015.030	10828732	Sealing lip	Dichtlippe	
41015.031	10827605	Angle	Winkel	
41015.032	10826757	Angle spiked apron	Winkel Nadellattentuch	
41015.033	10827603	Angle spiked apron	Winkel Nadellattentuch	
41015.034	10826809	Angle	Winkel	
41015.035	10258855	Washer 6.4-St-200HV	Scheibe 6.4-St-200HV	
41015.036	10431759	Hex. nut M6-8	6kt-Mutter M6-8	

B 76

RIETER

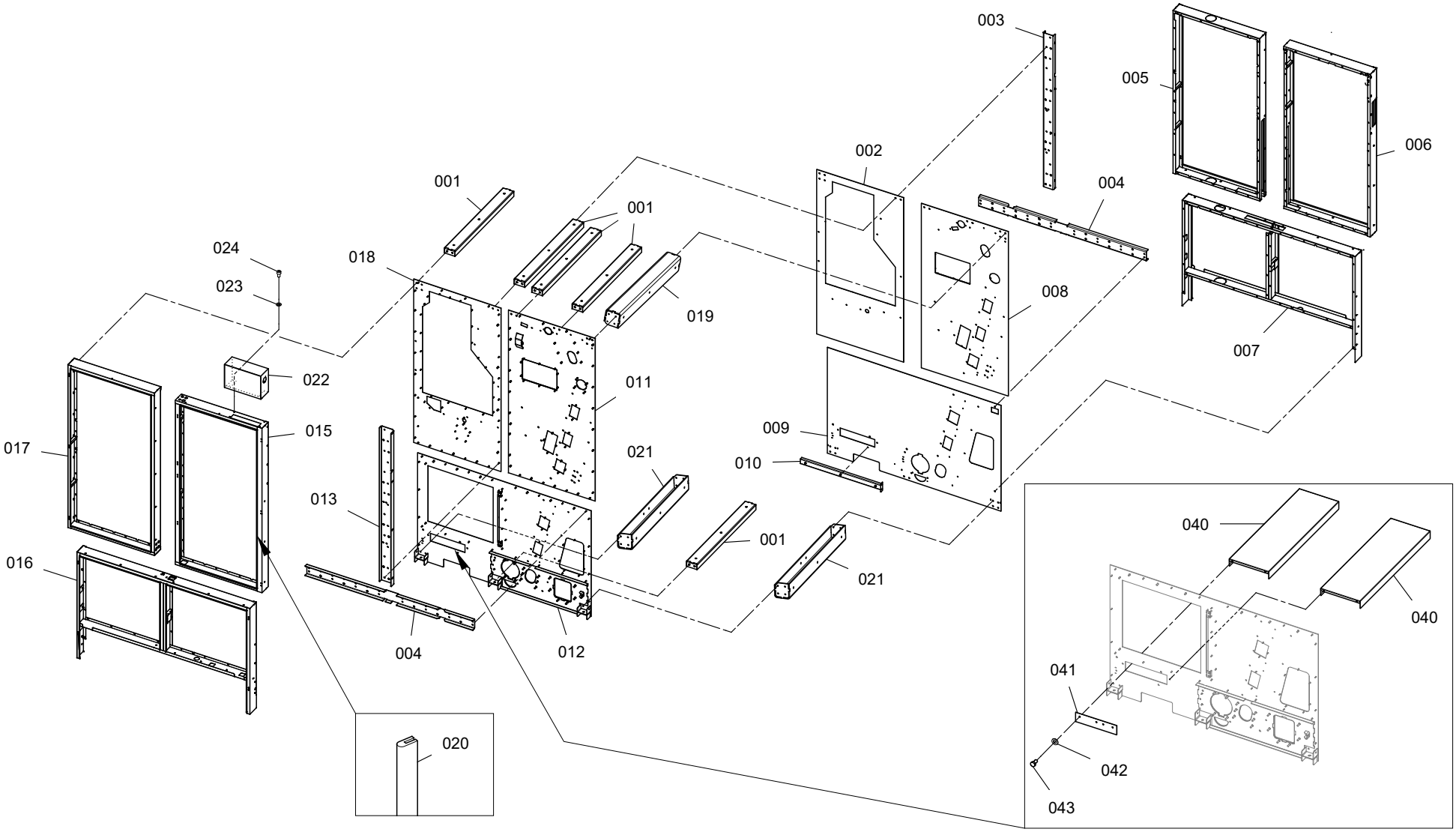

ZED000000000000000000001116081801001_2.svg

Customer
Blessed Textiles Ltd Unit 4, 56984

RIETER

Catalog No. Katalog-Nr.	Material no. Material-Nr.	Material Designation	Materialbezeichnung	Symbol Symbol
41015.001	10162915	Crossbar	Traverse	
41015.002	10691556	Shield right	Schild rechts	
41015.003	10962403	Profile vertical	Profil vertikal	
41015.004	10962402	Profile horizontal	Profil horizontal	
41015.005	10852011	Frame top	Rahmen oben	
41015.006	10852019	Frame top	Rahmen oben	
41015.007	10851975	Frame right	Rahmen rechts	
41015.008	10951526	Shield right	Schild rechts	
41015.009	10951696	Shield below R	Schild unten R	
41015.010	10255352	Guide consist of	Führung aus	
41015.011	10951695	Shield left	Schild links	
41015.012	10950564	Shield below L	Schild unten L	
41015.013	10962405	Profile vertical	Profil vertikal	
41015.015	10852055	Frame top	Rahmen oben	
41015.016	10852051	Frame left	Rahmen links	
41015.017	10852068	Frame top	Rahmen oben	
41015.018	10967685	Shield left	Schild links	
41015.019	10811568	Crossbar special 1800	Traverse spezial 1800	
41015.020	10615460	Profile 20x11-EPDM	Profil 20x11-EPDM	
41015.021	10237548	Crossbar consist of	Traverse aus	
41015.022	11077910	Safety hood	Schutzhaube	
41015.023	10456142	Washer 6.4-St-200HV	Scheibe 6.4-St-200HV	
41015.024	10258830	Cyl. screw M6x10	Zyl.Schraube M6x10	
41015.040	10509695	Slide platform	Gleitplatte	
41015.041	10179785	Cover	Abdeckung	
41015.042	10478061	Washer 8.4-St-200HV	Scheibe 8.4-St-200HV	
41015.043	10259084	Hex. screw M8x16	6kt-Schraube M8x16	

B 76

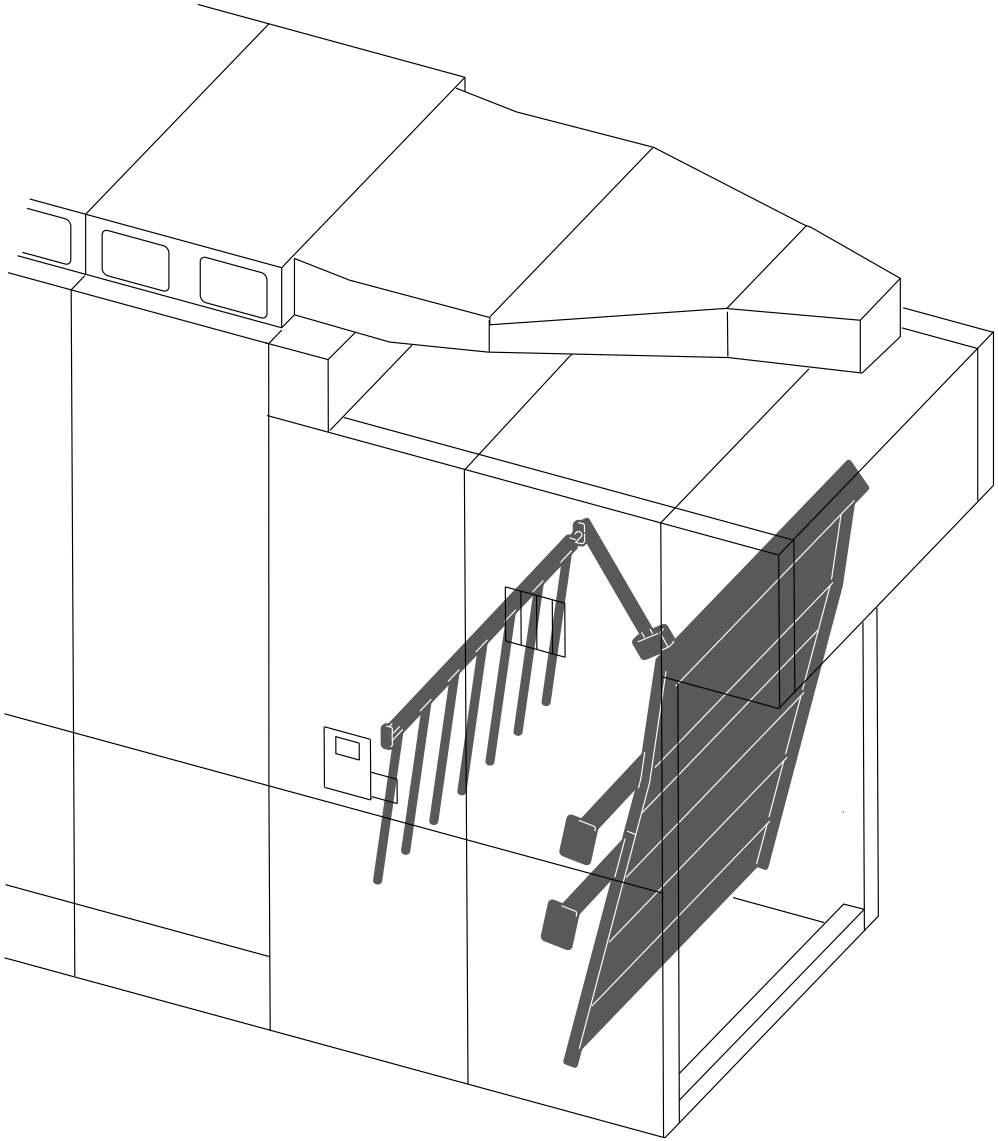

ZNP000000000000001000067816701000_1.svg

B 76

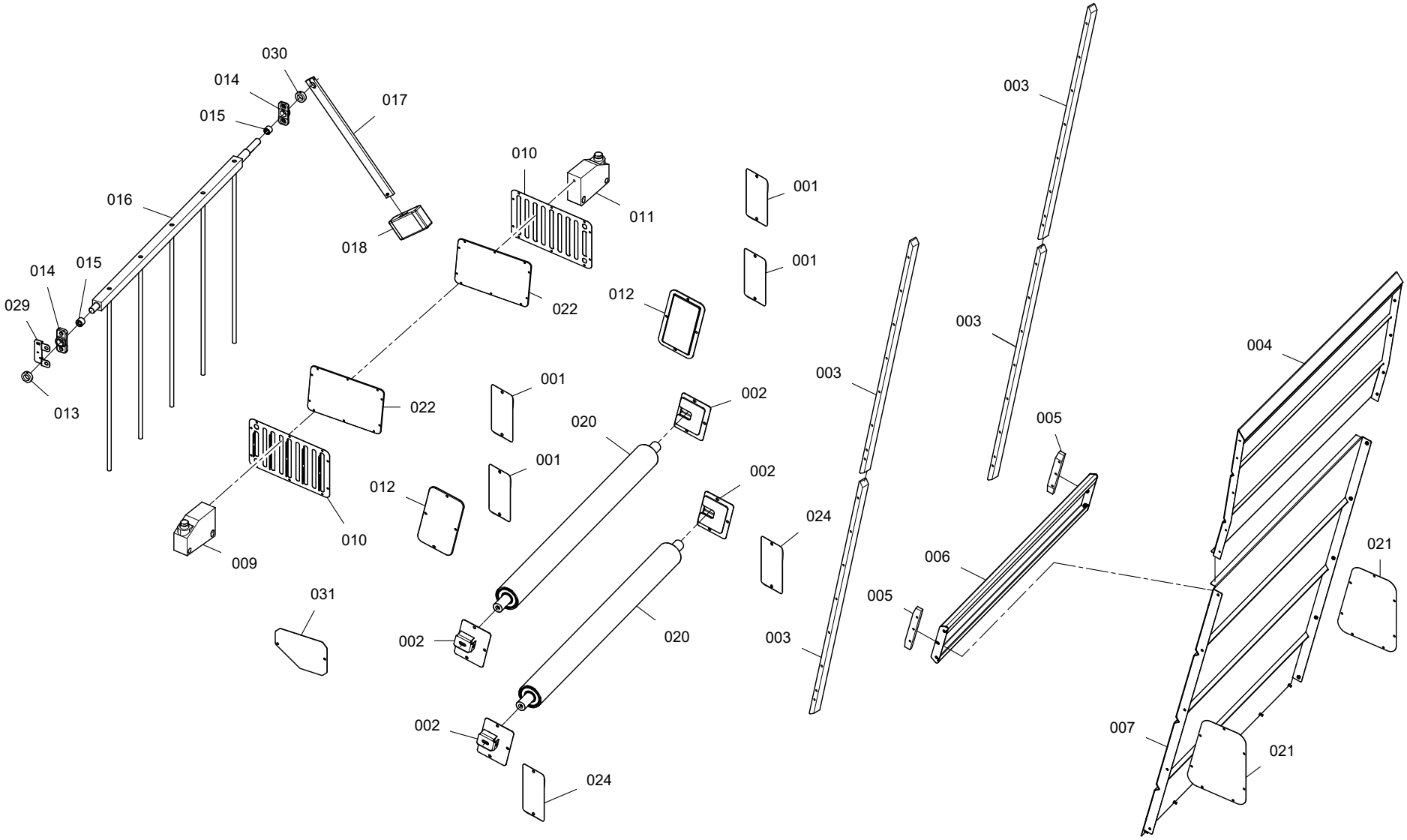

ZED0000000000000000001116081901001_1.svg

Customer
Blessed Textiles Ltd Unit 4, 56984

RIETER

Catalog No. Katalog-Nr.	Material no. Material-Nr.	Material Designation	Materialbezeichnung	Symbol Symbol
41020.001	10716248	Cover	Abdeckung	
41020.002	10177827	Tension unit consist of	Spanneinheit aus	
41020.003	10205481	Sealing bracket	Dichtwinkel	
41020.004	11032738	Rear wall top B76	Rückwand oben B76	
41020.005	10180179	Guiding profile	Führungsprofil	
41020.006	10180167	Rear wall bridge	Rückwandsteg	
41020.007	10949952	Rear wall below	Rückwand unten	
41020.009	10676013	Light sender DC30V 9m	Lichtsender DC30V 9m	⊕
41020.010	10659202	Mesh	Gitter	
41020.011	10676017	Light receiver PNP DC30V 9m	Lichtempfänger PNP DC30V 9m	⊕
41020.012	11101124	Window complete 122x252	Fenster komplett 122x252	
41020.013	10034867	Adjusting ring	Stellring	
41020.014	10258762	Bearing	Lager	
41020.015	10259739	Bushing 24D27X20.P2.N1.L	Buchse 24D27X20.P2.N1.L	
41020.016	10175876	Grid consist of	Rechen aus	
41020.017	10558362	Lever	Hebel	
41020.018	10244290	Counterweight 5kg	Gegengewicht 5kg	
41020.020	10177806	Intermediate shaft complete	Zwischenwelle komplett	
41020.021	10630265	Lid	Deckel	
41020.022	10747843	Window LW 400x250	Fenster LW 400x250	
41020.024	10773749	Cover	Abdeckung	
41020.029	10258761	Holder	Halter	
41020.030	0170-7891	Adjusting ring	Stellring	
41020.031	10527972	Plate	Platte	

B 76

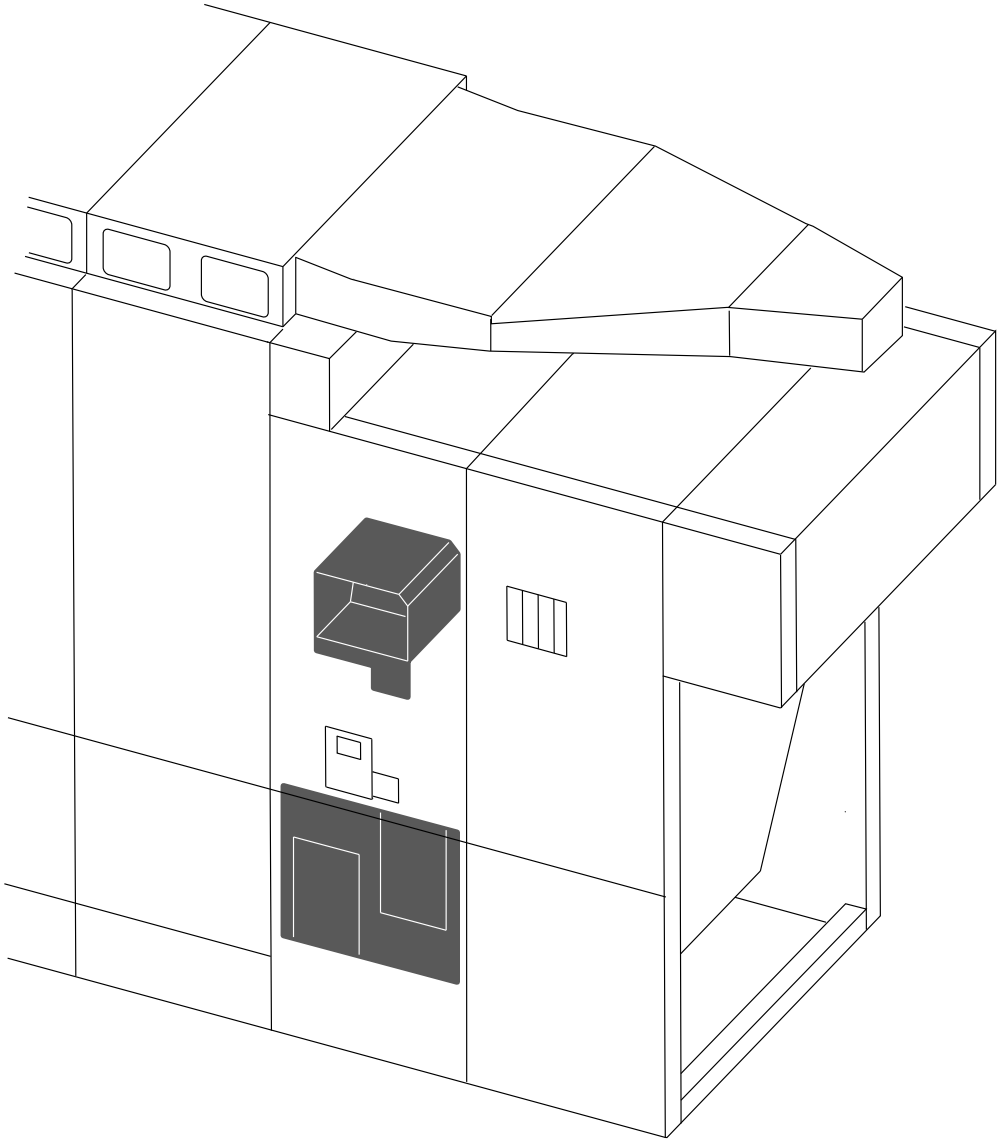

ZNP00000000000000100006781680100 0_1.svg

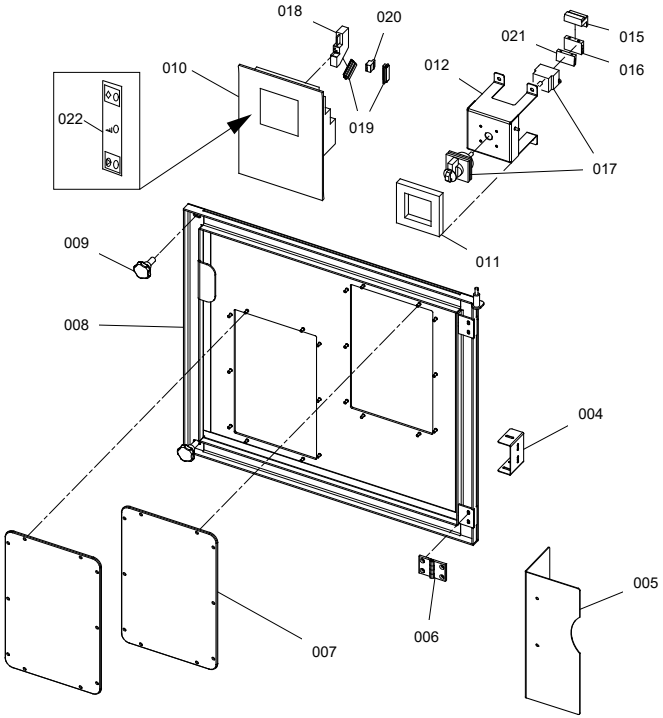

ZED0000000000000000001116143101004_1.svg

Customer
Blessed Textiles Ltd Unit 4, 56984

RIETER

Catalog No. Katalog-Nr.	Material no. Material-Nr.	Material Designation	Materialbezeichnung	Symbol Symbol
41030.004	10905512	Limit switch support	Endschalterhalter	
41030.005	10633281	Safety cover	Sicherheitsabdeckung	
41030.006	10563848	Hinge 30/56/6.3	Scharnier 30/56/6.3	
41030.007	10125507	Window LW 400x250	Fenster LW 400x250	
41030.008	10905152	Door inside	Tür innen	
41030.009	10125525	Star-shaped handle	Sterngriff	
41030.010	10165683	Panel CPU standard V1 DC24V 10DI/8DO	Panel CPU Standard V1 DC24V 10DI/8DO	
41030.011	10052653	Seal	Dichtung	
41030.012	10083362	Cover hood	Abdeckhaube	
41030.015	10235878	Terminal box cover plate 3p KG 41... 64	Klemmenabdeckung 3p KG 41... 64	
41030.016	10761801	Contact block door coupler 1s/1oe K1	Kontaktblock Türkupplung 1s/1oe K1	
41030.017	10761695	Load switch door coupler 22kW 63A 3p	Lastschalter Türkupplung 22kW 63A 3p	
41030.018	10044668	Input module analog 4xPot 0,5-10kE13Bit	Eingangsmodul analog 4xPot 0,5-10kE13Bit	⊕
41030.019	10126167	Plug socket R3,5 Fdz 12p 12A125V VS	Steckdose R3,5 Fdz 12p 12A125V VS	
41030.020	10043397	Plug in bar straight R5,08 Sr 4p 10A AC3	Steckleiste gerade R5,08 Sr 4p 10A AC300	
41030.021	10761805	Earth terminal door coupler KG41-KG64	Erdklemme Türkupplung KG41-KG64	
41030.022	10181848	Operator interface panel key tape B 70 U	Bedieneinheit Tastenstreifen B 70 U	

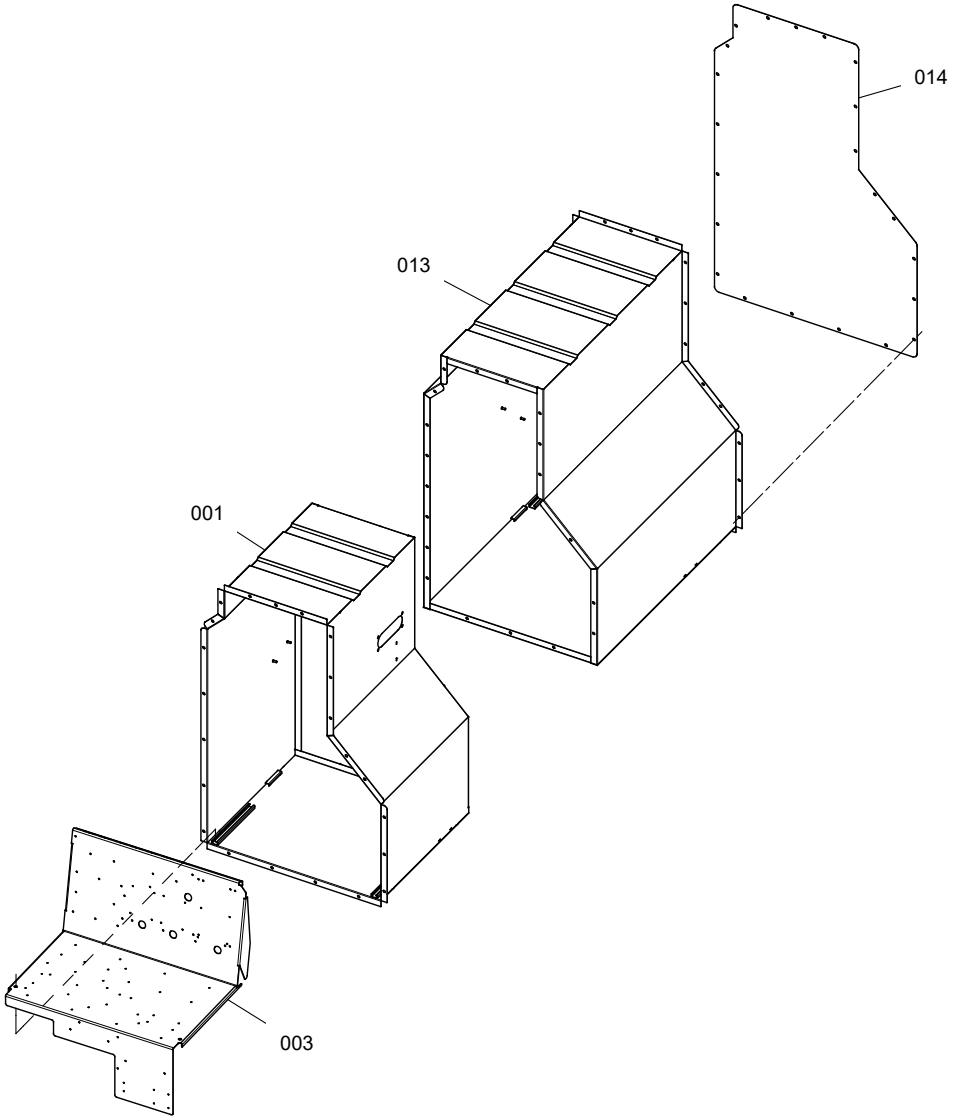

ZED0000000000000000001116143101004_2.svg

Customer
Blessed Textiles Ltd Unit 4, 56984

Catalog No. Katalog-Nr.	Material no. Material-Nr.	Material Designation	Materialbezeichnung	Symbol Symbol
41030.001	10905516	Electric panel	Elektroschrank	
41030.003	10690030	Base plate electrical B72 / B76	Grundplatte elektro B72 / B76	
41030.013	10691681	Electric panel R/S	Elektroschrank R/S	
41030.014	10689371	Sheet rear	Blech hinten	

B 76

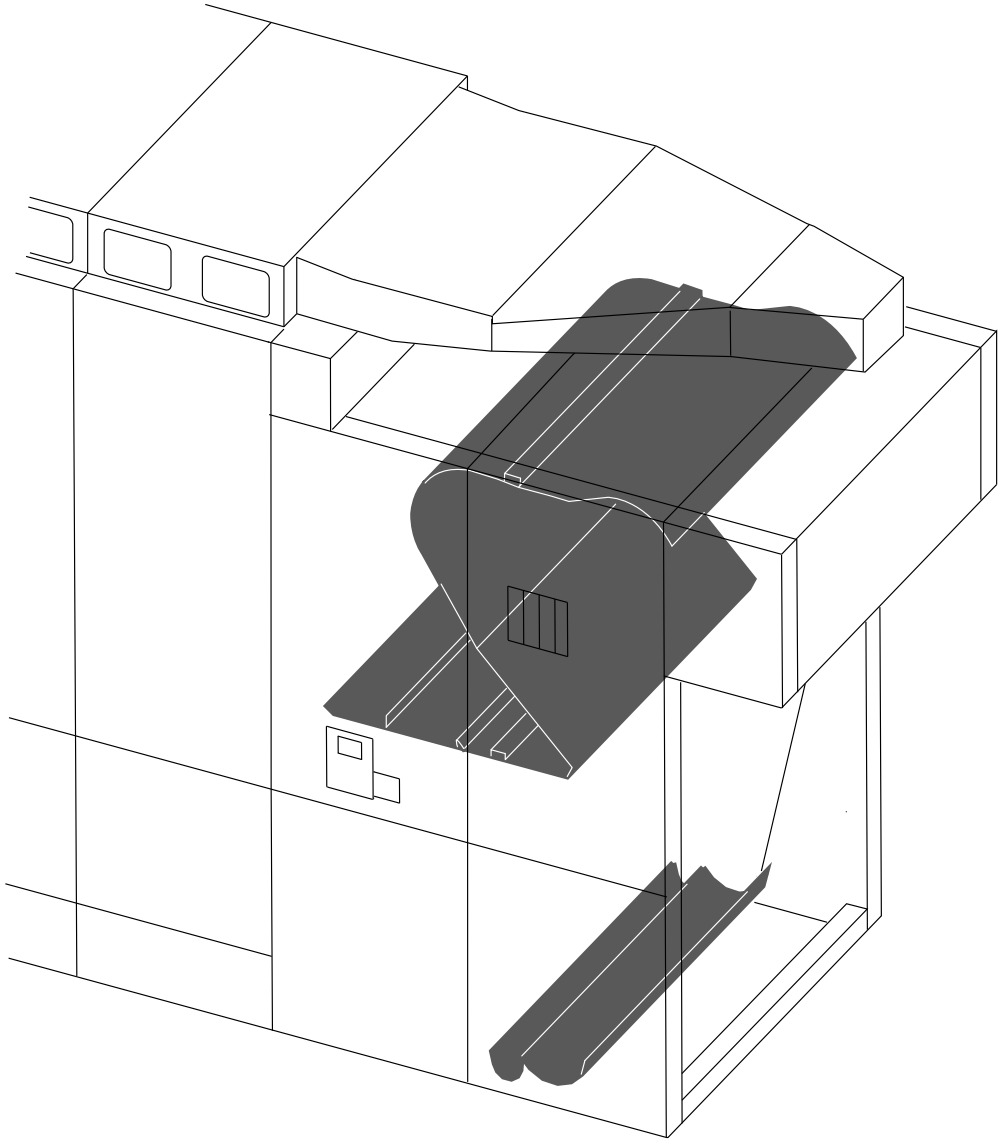

ZNP00000000000000100006781690100 0_1.svg

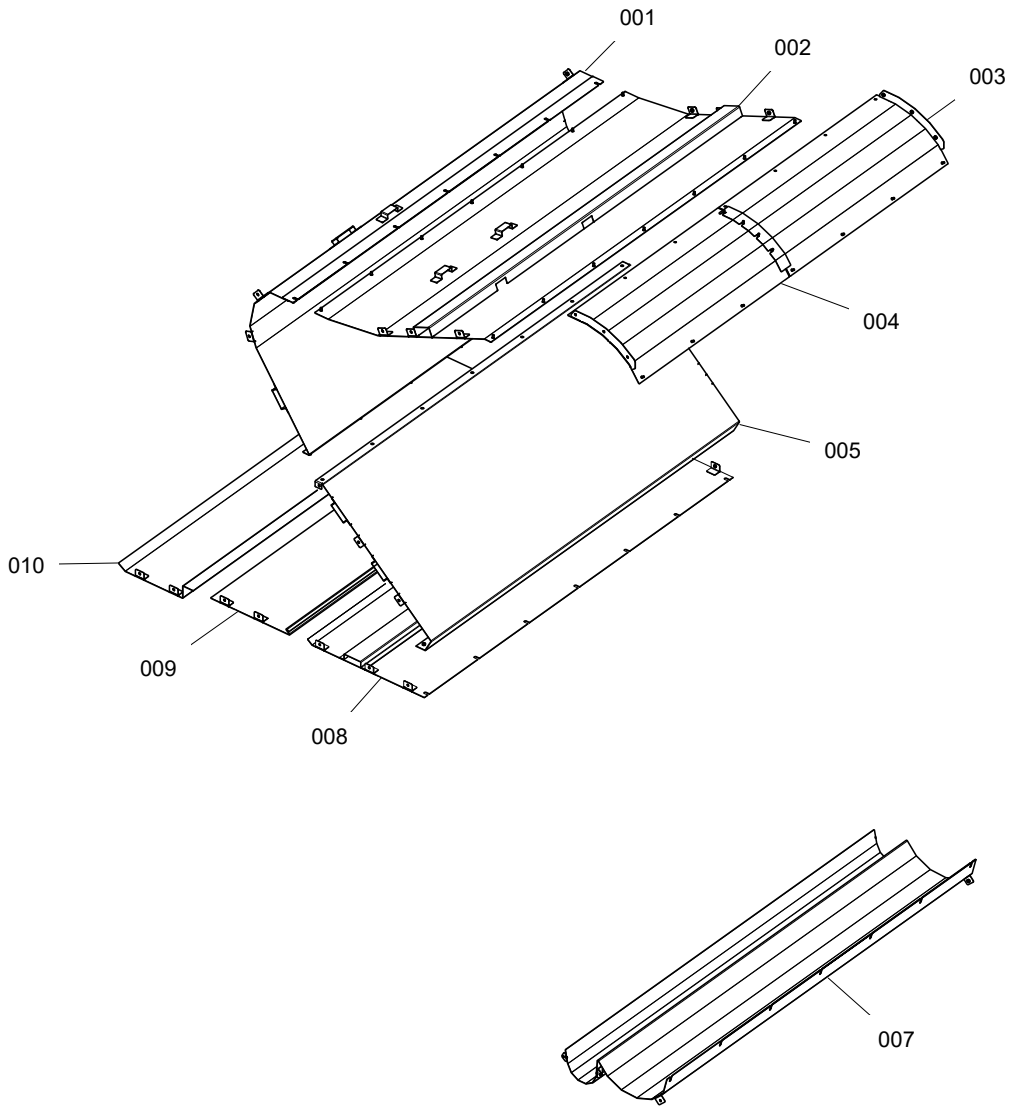

ZED0000000000000000001116143301001_1.svg

Customer
Blessed Textiles Ltd Unit 4, 56984

RIETER

Catalog No. Katalog-Nr.	Material no. Material-Nr.	Material Designation	Materialbezeichnung	Symbol Symbol
41040.001	10691702	Cover top	Abdeckung oben	
41040.002	10691706	Cover consist of	Abdeckung aus	
41040.003	10204865	Drum hood right	Walzenhaube rechts	
41040.004	10204874	Drum hood left	Walzenhaube links	
41040.005	10941856	Cover middle	Abdeckung Mitte	
41040.007	10800729	Trough consist of B76	Wanne aus B76	
41040.008	10179286	Cover below	Abdeckung unten	
41040.009	10205708	Connecting bridge consist of	Verbindungssteg aus	
41040.010	10574568	Guiding bridge consist of	Umlenkbrücke aus	

B 76

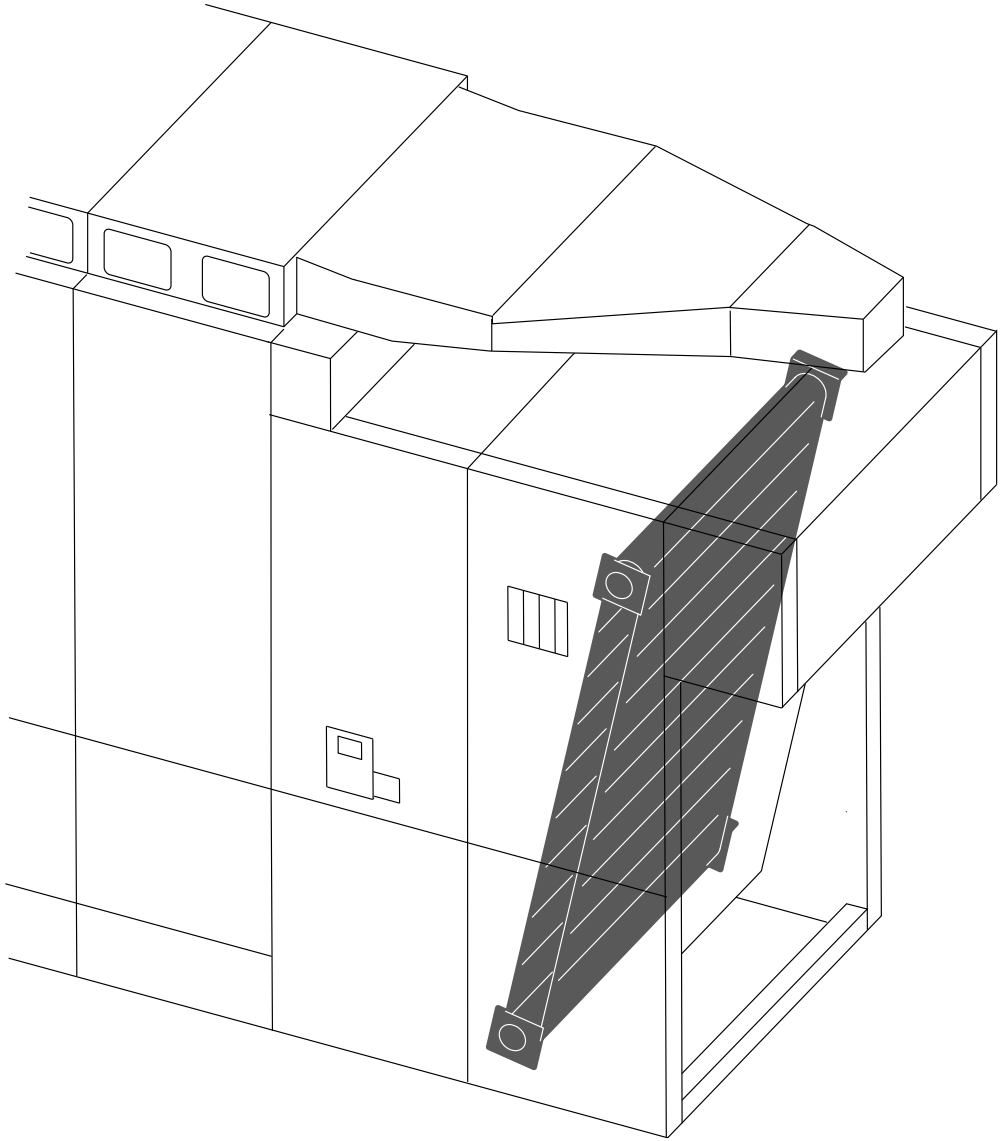

ZNP00000000000000100007149270100 0_1.svg

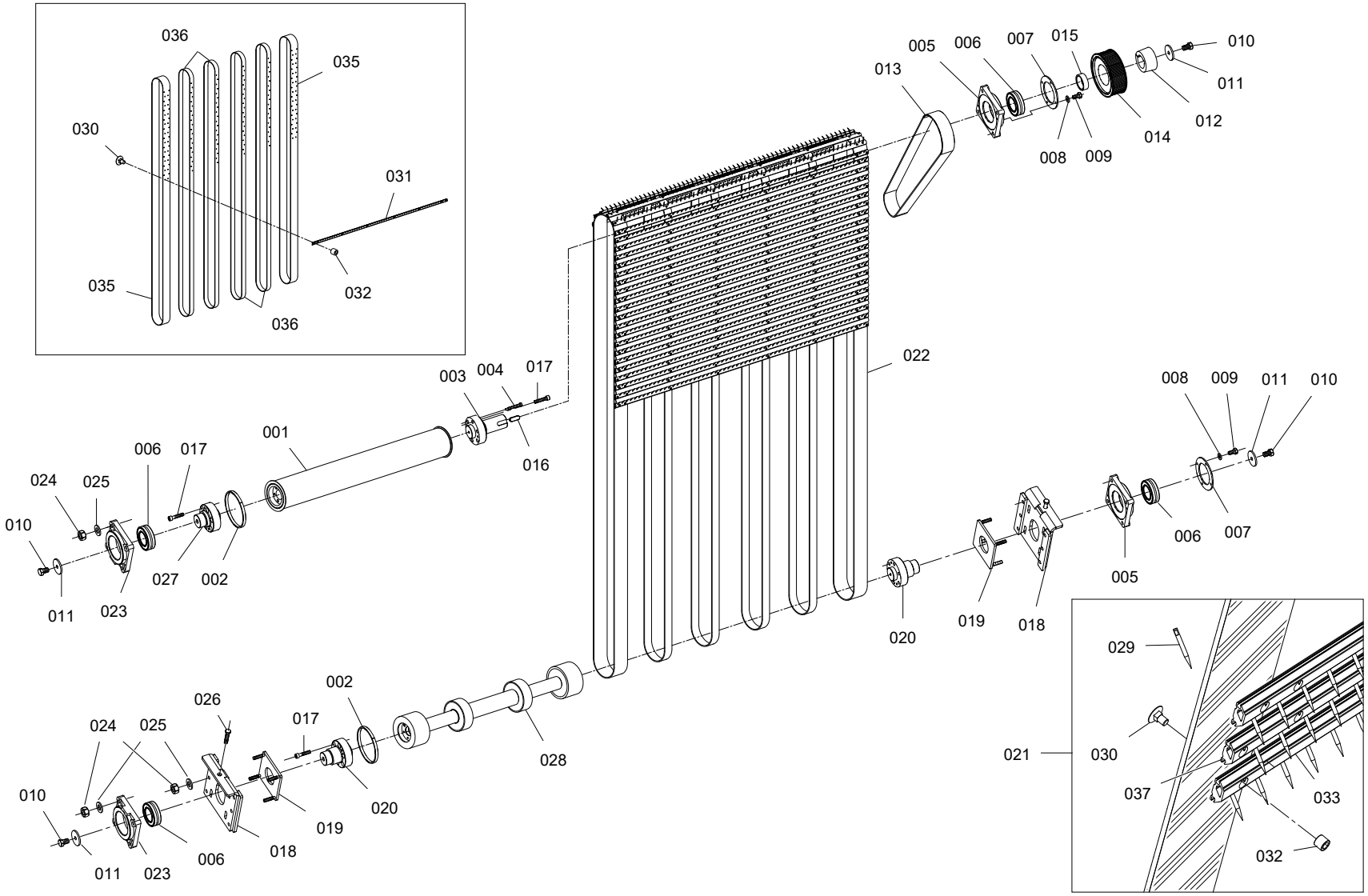

ZED0000000000000000001120244901002_1.svg

Customer
Blessed Textiles Ltd Unit 4, 56984

RIETER

Catalog No. Katalog-Nr.	Material no. Material-Nr.	Material Designation	Materialbezeichnung	Symbol Symbol
420.001	10162986	Spiked apron roller consist of	Nadellattentuchwalze aus	
420.002	10206348	Seal	Dichtung	
420.003	10162975	Tappet long	Zapfen lang	
420.004	10563751	Hex.socket head shoulder screw 12x30	Zyl.Passschraube 12x30	
420.005	10175465	Bearing housing	Lagergehäuse	
420.006	10205883	Radial spher. roller brg 50/90x28-2210-2	Pen.Rollenlager 50/90x28-2210-2RS	
420.007	10175381	Bearing cover	Lagerdeckel	
420.008	10456142	Washer 6.4-St-200HV	Scheibe 6.4-St-200HV	
420.009	10259079	Hex. screw M6x12	6kt-Schraube M6x12	
420.010	10259092	Hex. screw M10x25	6kt-Schraube M10x25	
420.011	10175485	Washer 12,5/58 x 5	Scheibe 12,5/58 x 5	
420.012	10204275	Tension bushing 50	Spannbuchse 50	
420.013	10427694	Toothed belt 1440RPP-SLV2-8-50	Zahnriemen 1440RPP-SLV2-8-50	⊕
420.014	10683245	Toothed belt disc P64-H8M-50	Zahnriemenscheibe P64-H8M-50	
420.015	10175532	Distance sleeve	Distanzbuchse	
420.016	10259339	Parallel key 14x9x40-C45+C	Passfeder 14x9x40-C45+C	
420.017	10258936	Cyl. screw M10x50	Zyl.Schraube M10x50	
420.018	10801960	Stretch support consist of NLT	Spannsupport aus NLT	
420.019	10801317	Counter plate	Gegenplatte	
420.020	10175471	Tappet	Zapfen	
420.021	10573611	Spiked apron spare part set B 75 V 1.1	Nadellattentuch Ersatzteilset B 75 V 1.1	
420.022	10453372	Spiked apron NLT B76 V1.1	Nadellattentuch NLT B76 V1.1	
420.023	10163094	Bearing housing	Lagergehäuse	
420.024	10431840	Hex. nut M10-8	6kt-Mutter M10-8	
420.025	10542604	Washer 10.5-St-200HV	Scheibe 10.5-St-200HV	
420.026	10478874	Hex. screw M12x60	6kt-Schraube M12x60	
420.027	10175544	Tappet short	Zapfen kurz	
420.028	10969387	Spiked apron roller B76	Nadellattentuchwalze B76	
420.029	0170-8158	Needle	Nadel	
420.030	11233750	Socket flat head screw M6x12	Senkschraube M6x12	

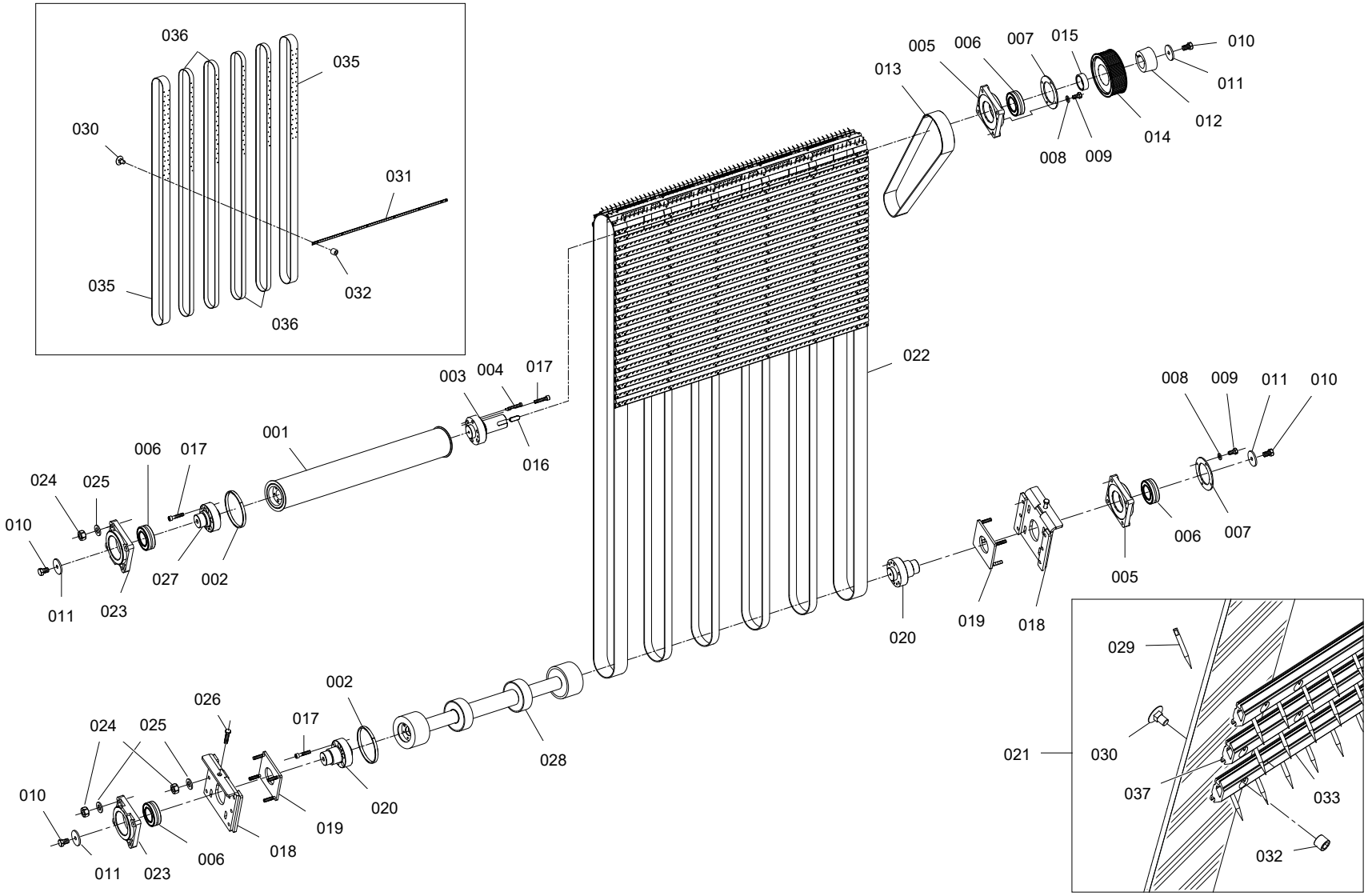

ZED0000000000000000001120244901002_1.svg

Customer
Blessed Textiles Ltd Unit 4, 56984

RIETER

Catalog No. Katalog-Nr.	Material no. Material-Nr.	Material Designation	Materialbezeichnung	Symbol Symbol
420.031	10573566	Sealing stripe B 75 V 1.1	Dichtstreifen B 75 V 1.1	
420.032	10051676	Nut M6x8	Mutter M6x8	
420.033	10206165	Spiked bar 59	Nadellatte 59	
420.035	10453052	Belt 93	Riemen 93	
420.036	10453051	Belt 50	Riemen 50	
420.037	10206164	Spiked bar 59	Nadellatte 59	

B 76

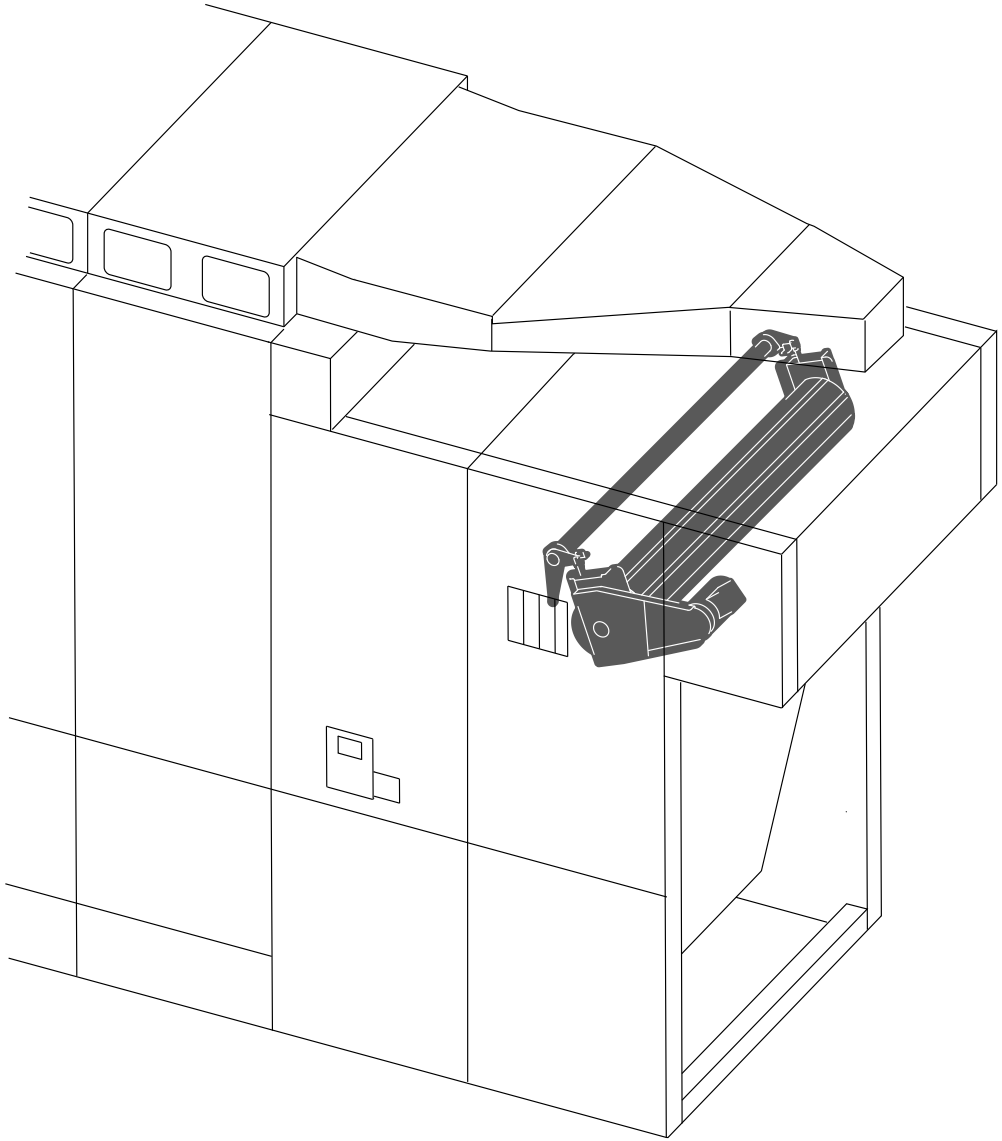

ZNP0000000000000001000067817401000_1.svg

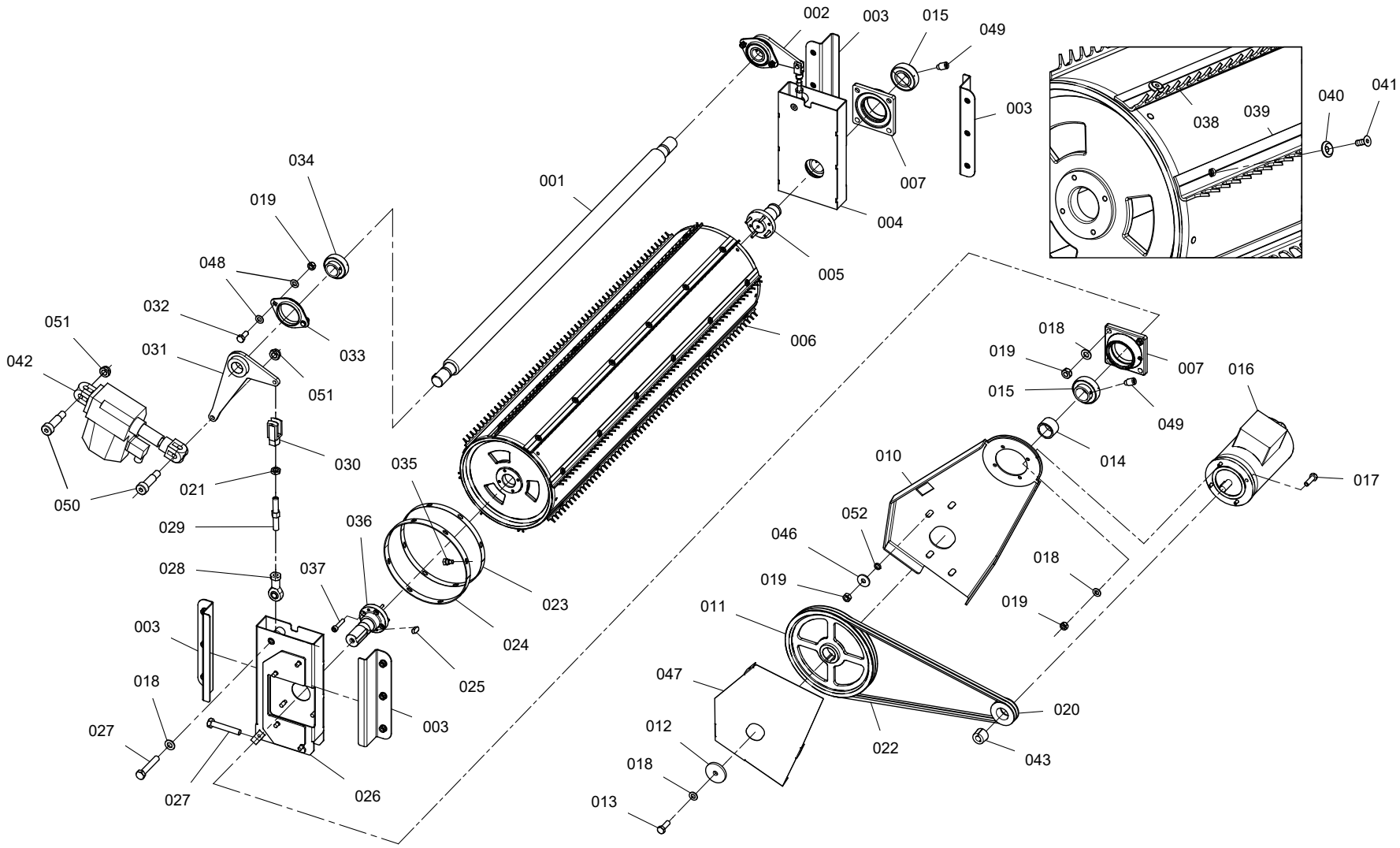

ZED0000000000000000001116143501002_1.svg

Catalog No. Katalog-Nr.	Material no. Material-Nr.	Material Designation	Materialbezeichnung	Symbol Symbol
430.001	10179786	Aktoric shaft	Aktorikwelle	
430.002	10180280	Aktoric lever right	Aktorikhebel rechts	
430.003	10180303	Guiding angle long	Führungswinkel lang	
430.004	10180251	Guiding sled right	Führungsschlitten rechts	
430.005	11118208	Tappet	Zapfen	
430.006	11133473	Complete roller B76 V3	Komplett Walze B76 V3	
430.007	10356551	Pedestal bearing housing FY508M	Stehlagergehäuse FY508M	
430.010	11047257	Motor carrier complete IE3	Motorträger komplett IE3	
430.011	10315992	V-belt pulley SPZ-280x2x40H8	Keilriemenscheibe SPZ-280x2x40H8	
430.012	10083608	Shaft end washer 11/50x6	Vorlegscheibe 11/50x6	
430.013	10259093	Hex. screw M10x30	6kt-Schraube M10x30	
430.014	10180713	Distance ring	Distanzring	
430.015	10356498	Tension bearing 40/80x36-YAT 208	Spannlager 40/80x36-YAT 208	
430.016	10838605	Motor 0.83 kW, 400 V, 50Hz/60Hz	Motor 0.83 kW, 400 V, 50Hz/60Hz	
430.017	10259094	Hex. screw M10x35	6kt-Schraube M10x35	
430.018	10478062	Washer 10.5-St-200HV	Scheibe 10.5-St-200HV	
430.019	10431840	Hex. nut M10-8	6kt-Mutter M10-8	
430.020	10255925	V-belt pulley SPZ-1T71x2x38.6	Keilriemenscheibe SPZ-1T71x2x38.6	
430.021	10356247	Hex. nut M10-04	6kt-Mutter M10-04	
430.022	10560091	Set of v-belts SPZ 1500x2	Satz Keilriemen SPZ 1500x2	⊕
430.023	10419316	Seal	Dichtung	
430.024	10419376	Tension tape	Spannband	
430.025	10454570	Parallel key 12x8x25-C45+C	Passfeder 12x8x25-C45+C	
430.026	10449283	Guiding sled left	Führungsschlitten links	
430.027	10237151	Hex. screw M10x60	6kt-Schraube M10x60	
430.028	10560093	Rod end K/B-10/M10LH-wfr	Gelenkkopf K/B-10/M10LH-wfr	
430.029	10180309	Threaded rod M10 L/R	Gewindestange M10 L/R	
430.030	10482999	Fork head G10x20	Gabelkopf G10x20	
430.031	10205829	Aktoric lever left	Aktorikhebel links	
430.032	10259085	Hex. screw M8x20	6kt-Schraube M8x20	

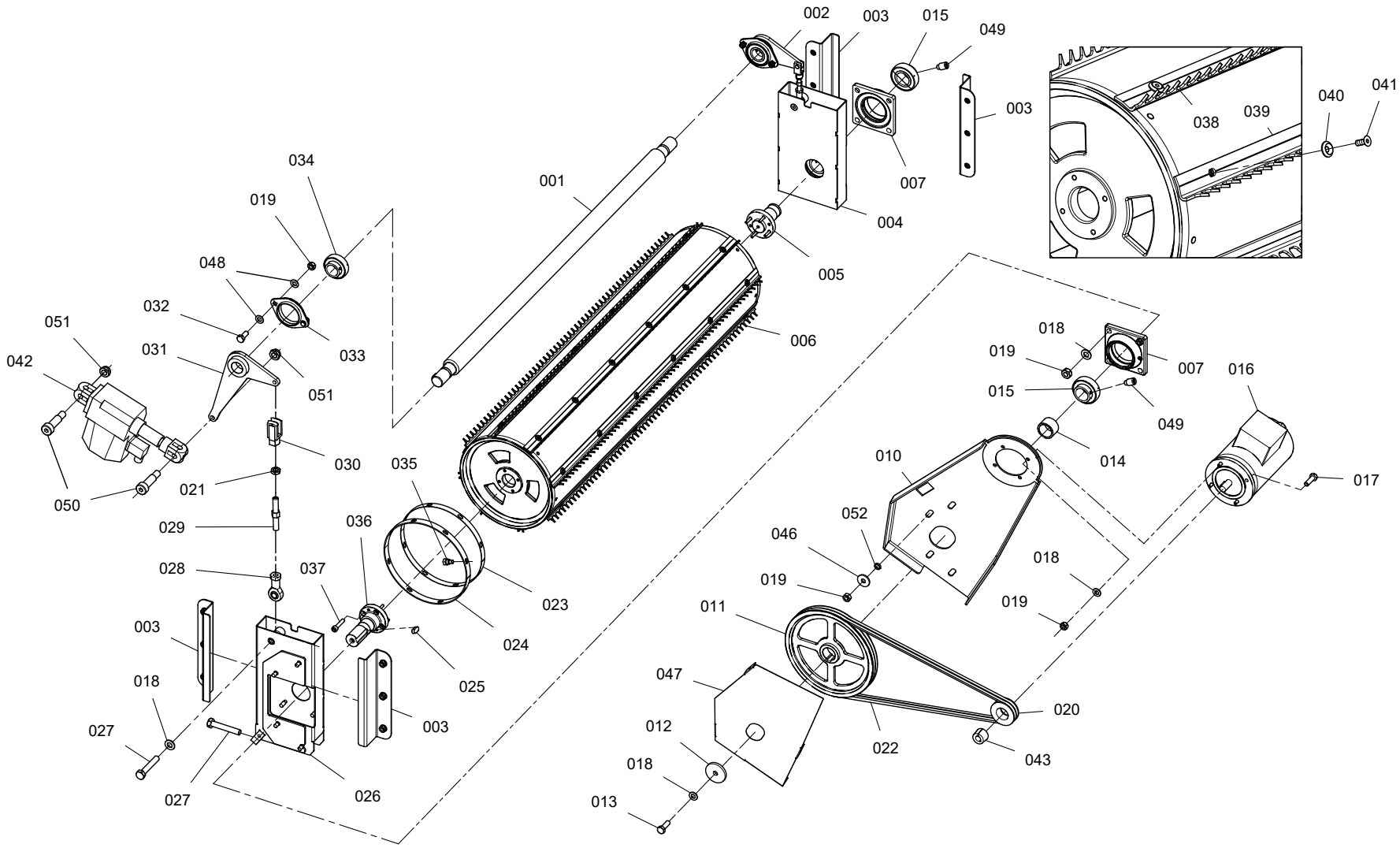

ZED0000000000000000001116143501002_1.svg

Catalog No. Katalog-Nr.	Material no. Material-Nr.	Material Designation	Materialbezeichnung	Symbol Symbol
430.033	10356531	Flange housing PFT72	Flanschgehäuse PFT72	
430.034	10356499	Tension bearing 35/72x33-YAT 207	Spannlager 35/72x33-YAT 207	
430.035	10206787	Screw	Schraube	
430.036	11118151	Tappet fix	Zapfen fest	
430.037	10258950	Cyl. screw M8x30	Zyl.Schraube M8x30	
430.038	10152854	Grid angle Z 89	Rechen Winkel Z 89	
430.039	10152890	Grid angle Z 88	Rechen Winkel Z 88	
430.040	10561401	Washer w. lowering SN213912-6.4/18	Scheibe m. Senkung SN213912-6.4/18	
430.041	10479261	Socket flat head screw M6x16	Senkschraube M6x16	
430.042	10595183	Linear electro cylinder DC24V 1600N 100m	Linearelektrozylinder DC24V 1600N 100mm	
430.043	0071-0672	Tension bushing 24	Spannbuchse 24	
430.046	10665583	Washer 10,5x30X3	Scheibe 10,5x30X3	
430.047	10938263	Cover motor carrier	Abdeckung Motorträger	
430.048	10478061	Washer 8.4-St-200HV	Scheibe 8.4-St-200HV	
430.049	10537203	Threaded pin M6x0.75x10-45H	Gewindestift M6x0.75x10-45H	
430.050	10563751	Hex.socket head shoulder screw 12x30	Zyl.Passschraube 12x30	
430.051	10480503	Hex. nut M10-6	6kt-Mutter M10-6	
430.052	10180362	Centering ring	Zentrierring	

B 76

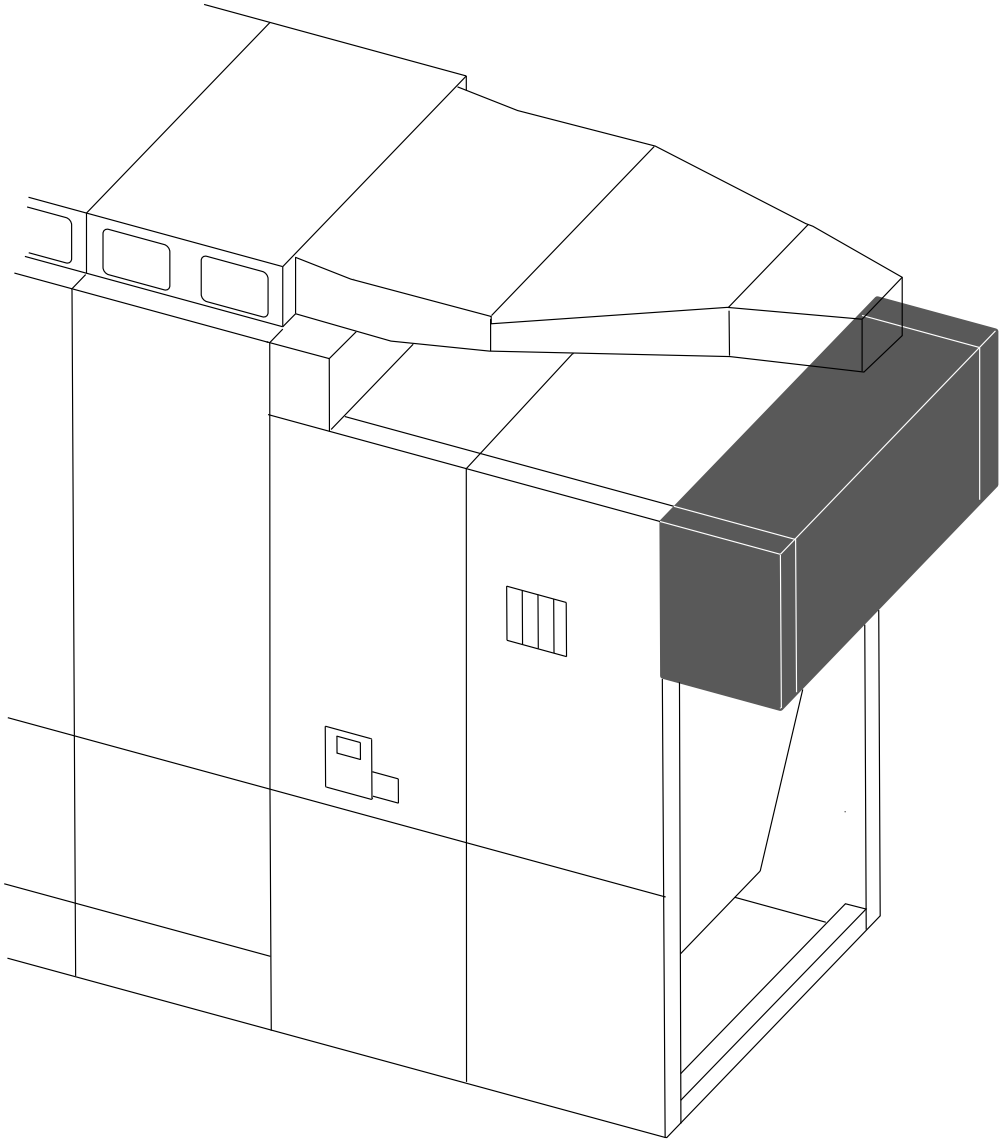

ZNP000000000000001000067828601000_1.svg

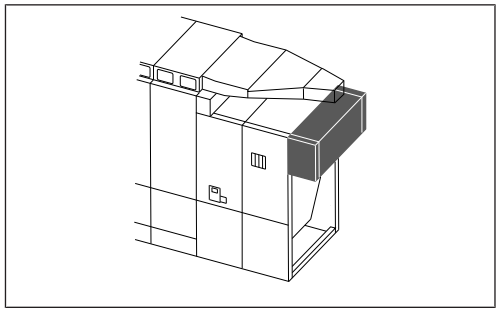

44010

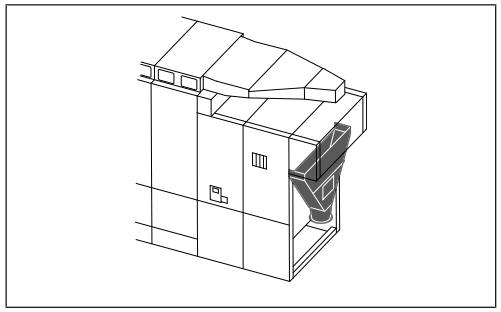

44015

B 76

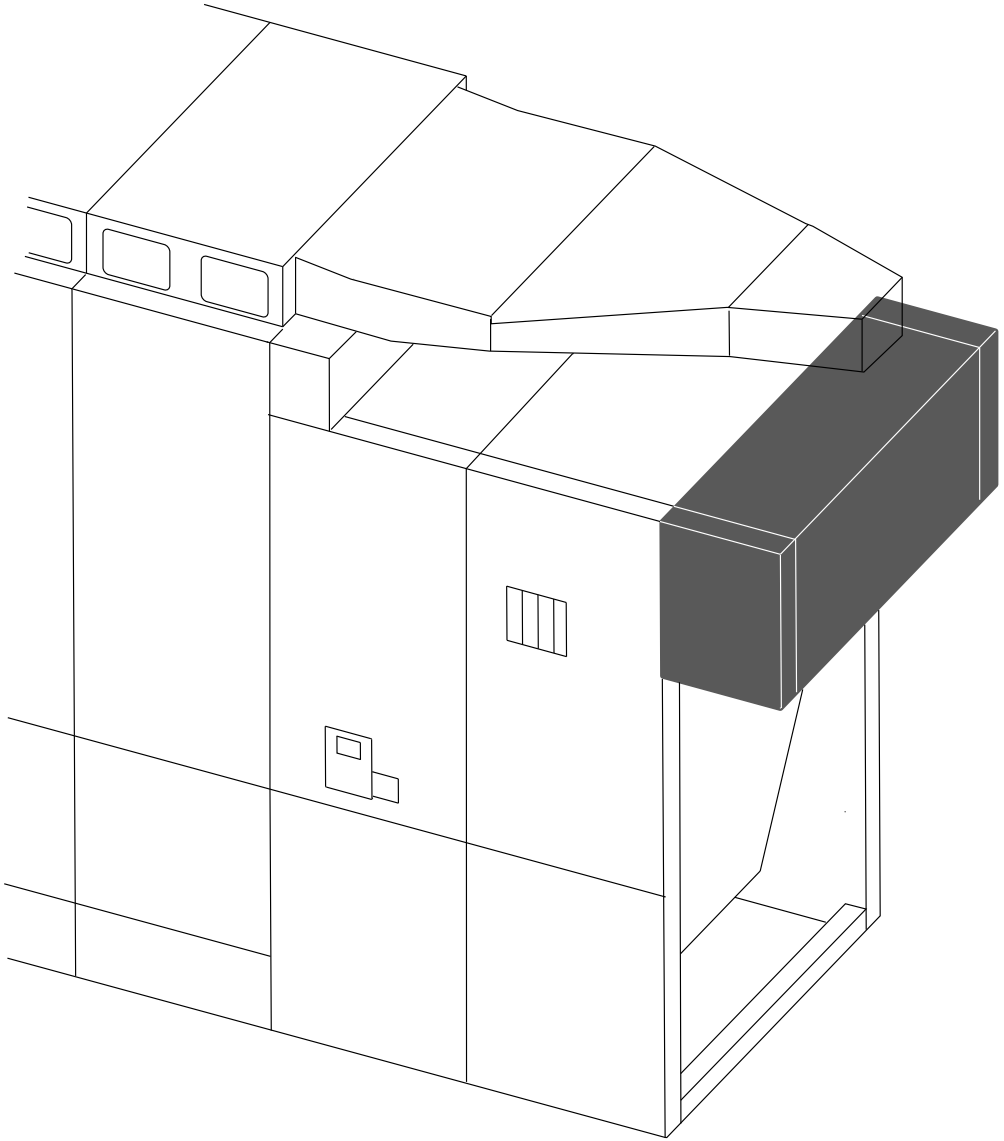

ZNP00000000000000010000678178010 00_1.svg

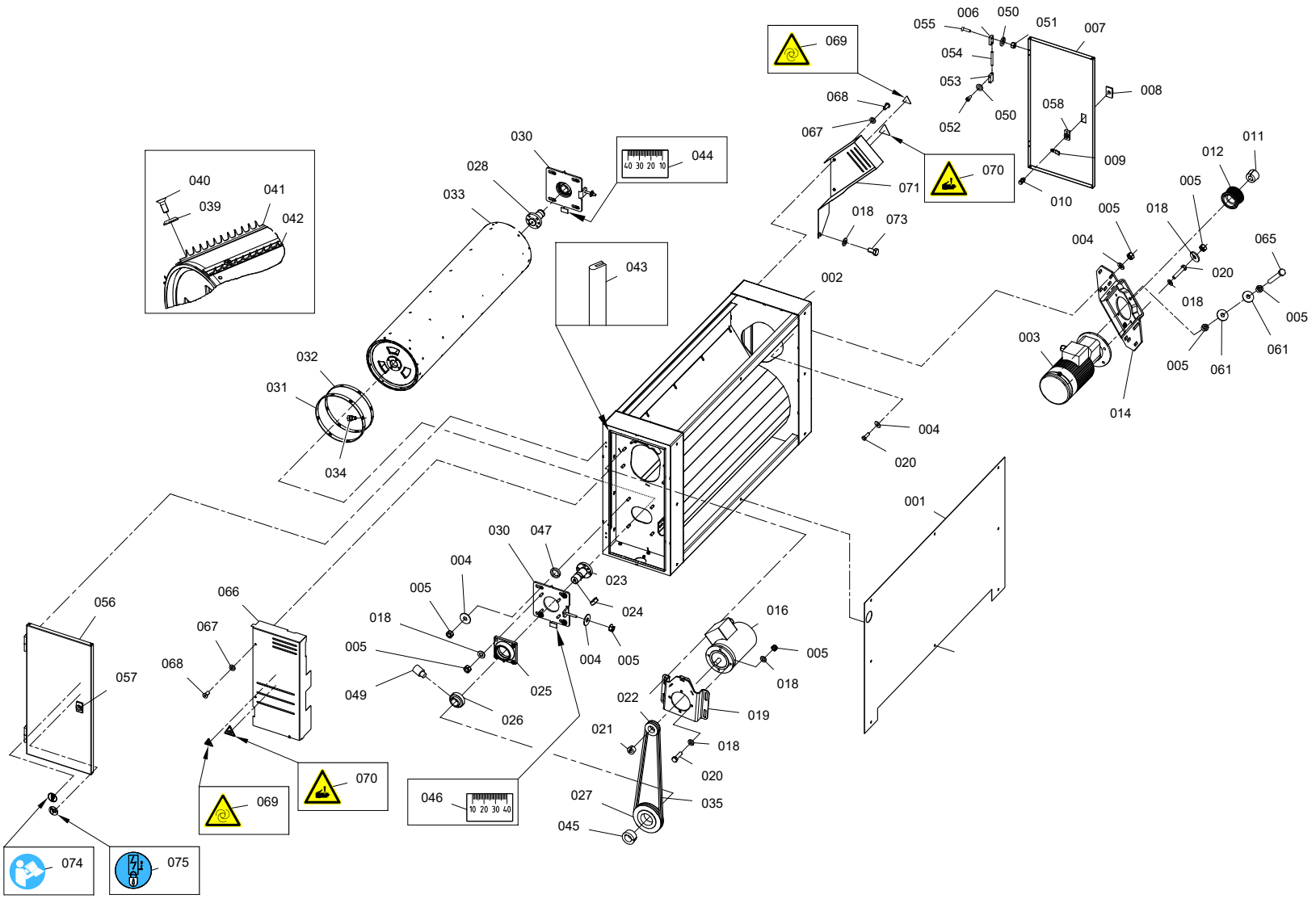

ZED0000000000000000001116143601004_1.svg

Catalog No. Katalog-Nr.	Material no. Material-Nr.	Material Designation	Materialbezeichnung	Symbol Symbol
44010.001	10958289	Front cover	Frontverdeck	
44010.002	10844459	Frame consist of	Rahmen aus	
44010.003	11075027	Geared motor 2.2 kW, 400 V, 50 Hz	Getriebemotor 2.2 kW, 400 V, 50 Hz	
44010.004	10665583	Washer 10,5x30X3	Scheibe 10,5x30X3	
44010.005	10431840	Hex. nut M10-8	6kt-Mutter M10-8	
44010.006	10493537	Hinge black	Scharnier schwarz	
44010.007	10934126	Door	Tür	
44010.008	10935602	Lock shield 2.0	Schlossschild 2.0	
44010.009	10543379	Tongue 2	Zunge 2	
44010.010	10624744	Activating insert chrome-plated 8	Betätigungseinsatz verchromt 8	
44010.011	10204273	Tension bushing 25	Spannbuchse 25	
44010.012	10683546	Toothed belt disc P36-H8M-50	Zahnriemenscheibe P36-H8M-50	
44010.014	11052622	Motor carrier complete B76 V3	Motorträger komplett B76 V3	
44010.016	10838605	Motor 0.83 kW, 400 V, 50Hz/60Hz	Motor 0.83 kW, 400 V, 50Hz/60Hz	
44010.018	10478062	Washer 10.5-St-200HV	Scheibe 10.5-St-200HV	
44010.019	11049254	Motor carrier complete AW IE3	Motorträger komplett AW IE3	
44010.020	10259093	Hex. screw M10x30	6kt-Schraube M10x30	
44010.021	0071-0672	Tension bushing 24	Spannbuchse 24	
44010.022	10255925	V-belt pulley SPZ-1T71x2x38.6	Keilriemenscheibe SPZ-1T71x2x38.6	
44010.023	11118204	Tappet fix	Zapfen fest	
44010.024	10454570	Parallel key 12x8x25-C45+C	Passfeder 12x8x25-C45+C	
44010.025	10356551	Pedestal bearing housing FY508M	Stehlagergehäuse FY508M	
44010.026	10356498	Tension bearing 40/80x36-YAT 208	Spannlager 40/80x36-YAT 208	
44010.027	10315857	V-belt pulley SPZ 160/2	Keilriemenscheibe SPZ 160/2	
44010.028	11118208	Tappet	Zapfen	
44010.030	10083811	Bearing plate	Lagerplatte	
44010.031	10419316	Seal	Dichtung	
44010.032	10419376	Tension tape	Spannband	
44010.033	10924790	Complete roller	Komplett Walze	
44010.034	10206787	Screw	Schraube	

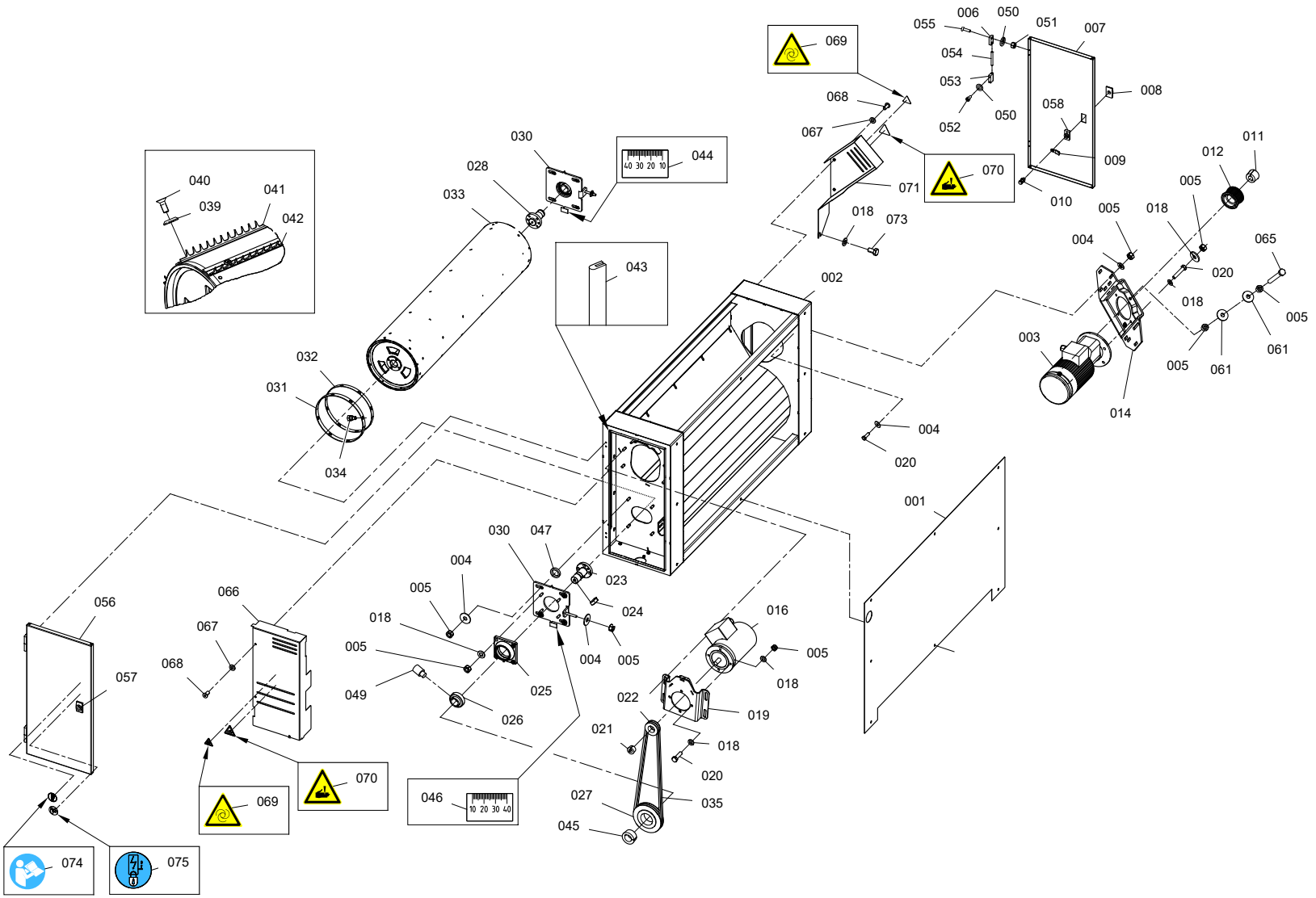

ZED000000000000000001116143601004_1.svg

Catalog No. Katalog-Nr.	Material no. Material-Nr.	Material Designation	Materialbezeichnung	Symbol Symbol
44010.035	11045314	Set of v-belts SPZ 1000x2	Satz Keilriemen SPZ 1000x2	
44010.039	10561401	Washer w. lowering SN213912-6.4/18	Scheibe m. Senkung SN213912-6.4/18	
44010.040	10479261	Socket flat head screw M6x16	Senkschraube M6x16	
44010.041	10152890	Grid angle Z 88	Rechen Winkel Z 88	
44010.042	10152854	Grid angle Z 89	Rechen Winkel Z 89	
44010.043	10615460	Profile 20x11-EPDM	Profil 20x11-EPDM	
44010.044	10084435	Measuring device left	Messeinrichtung links	
44010.045	10315314	Tension bushing 40	Spannbuchse 40	
44010.046	10084436	Measuring device right	Messeinrichtung rechts	
44010.047	10180362	Centering ring	Zentrierring	
44010.049	10537203	Threaded pin M6x0.75x10-45H	Gewindestift M6x0.75x10-45H	
44010.050	10259623	Washer 5.3-St-200HV	Scheibe 5.3-St-200HV	
44010.051	10259463	Hex. nut M5-8	6kt-Mutter M5-8	
44010.052	10258829	Cyl. screw M5x10	Zyl.Schraube M5x10	
44010.053	10493535	Hinge black	Scharnier schwarz	
44010.054	10707303	Pin 6x58	Stift 6x58	
44010.055	10845883	Socket flat head screw M5x20	Senkschraube M5x20	
44010.056	10932949	Door	Tür	
44010.057	10935584	Bearing bushing left 2.0	Lagerbuchse links 2.0	
44010.058	10935586	Bearing bushing right 2.0	Lagerbuchse rechts 2.0	
44010.061	10560543	Washer 10/30x2	Scheibe 10/30x2	
44010.065	10478158	Hex. screw M10x80	6kt-Schraube M10x80	
44010.066	11195987	Safety cover L	Sicherheitsabdeckung L	
44010.067	10456142	Washer 6.4-St-200HV	Scheibe 6.4-St-200HV	
44010.068	10581205	Cyl. screw M6x16	Zyl.Schraube M6x16	
44010.069	10420611	Warning sign W018-50	Warnschild W018-50	
44010.070	10472406	Warning sign 66x57	Warnschild 66x57	
44010.071	11195972	Safety cover R	Sicherheitsabdeckung R	
44010.073	10259091	Hex. screw M10x20	6kt-Schraube M10x20	
44010.074	10948141	Information sign D-M002-50	Hinweisschild D-M002-50	

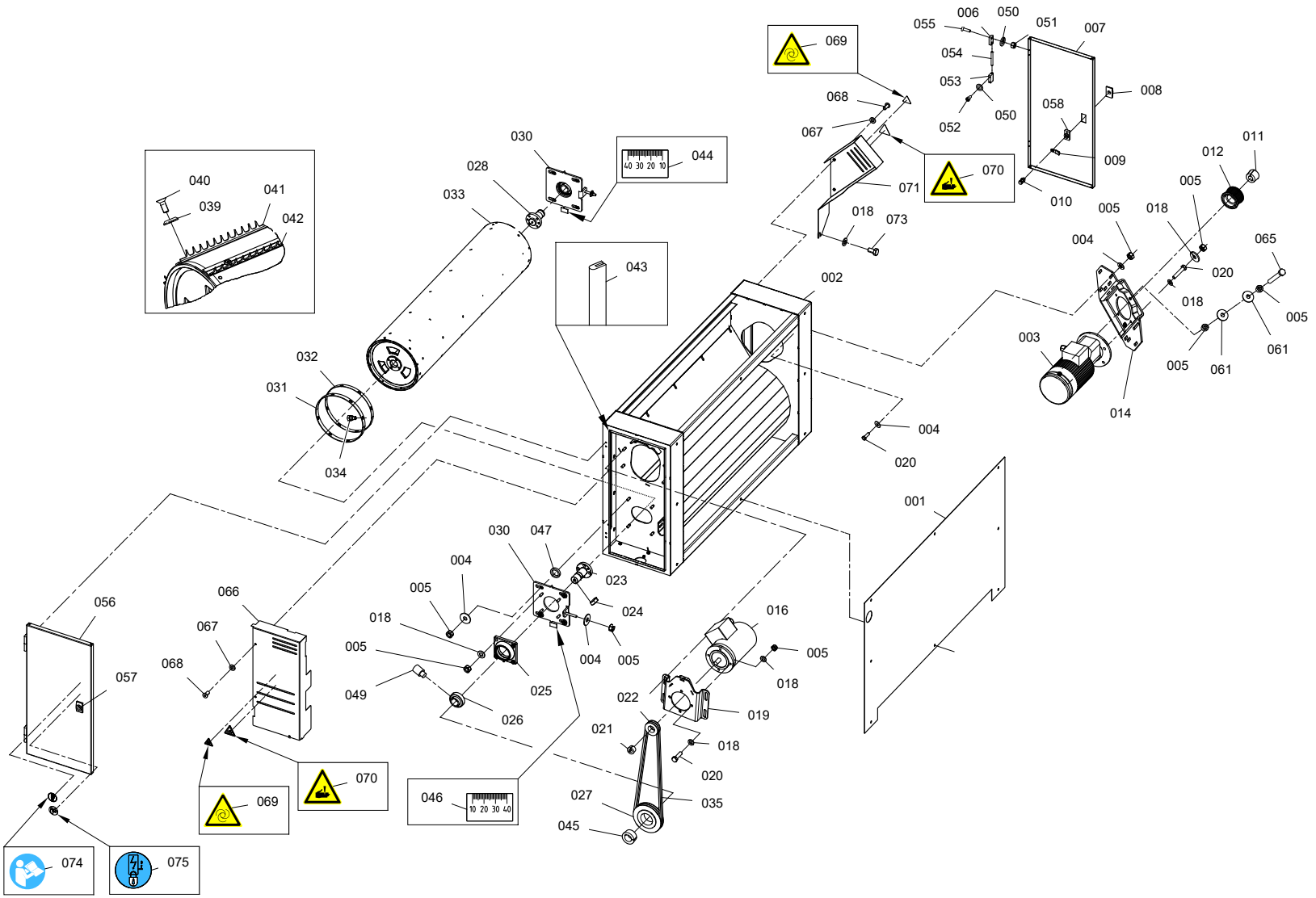

ZED000000000000000001116143601004_1.svg

Customer
Blessed Textiles Ltd Unit 4, 56984

RIETER

Catalog No. Katalog-Nr.	Material no. Material-Nr.	Material Designation	Materialbezeichnung	Symbol Symbol
44010.075	10415574	Information sign 50	Hinweisschild 50	

B 76

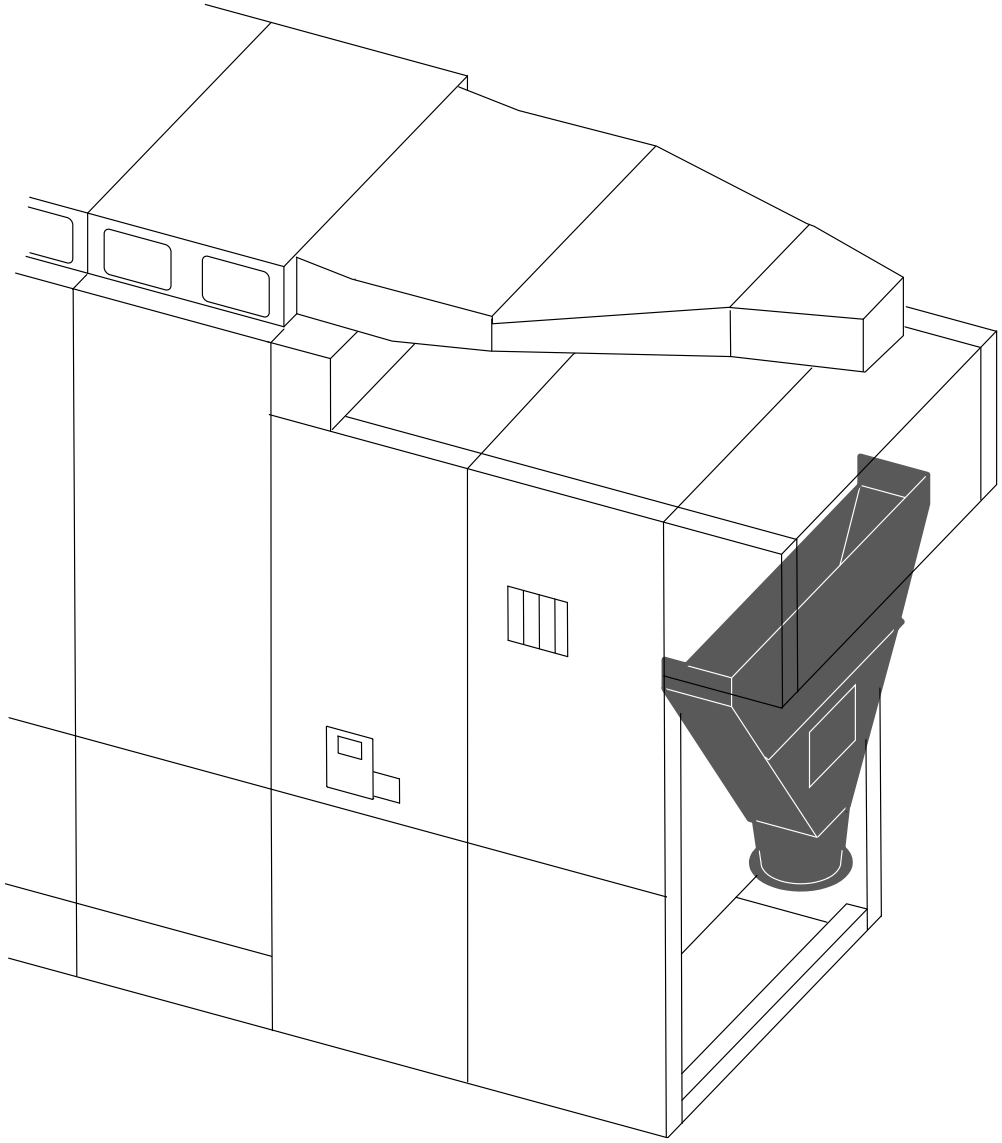

ZNP00000000000000100006781800100 0_1.svg

B 76

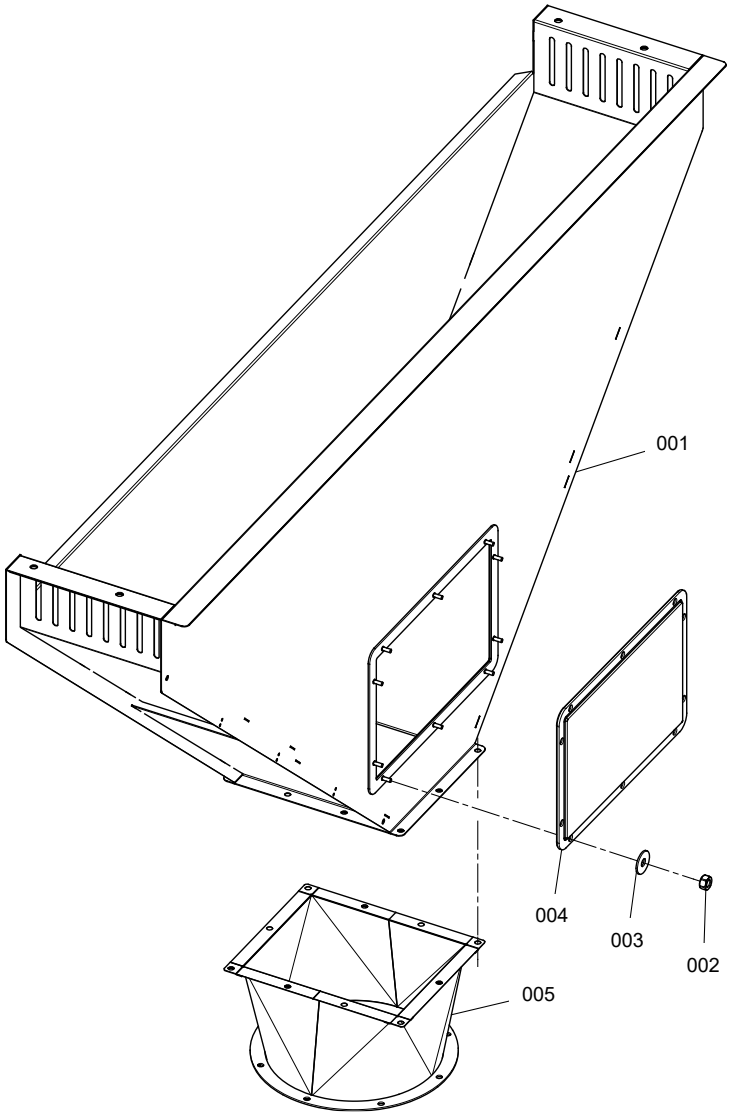

ZED0000000000000000001116143701001_1.svg

Customer
Blessed Textiles Ltd Unit 4, 56984

RIETER

Catalog No. Katalog-Nr.	Material no. Material-Nr.	Material Designation	Materialbezeichnung	Symbol Symbol
44015.001	10700262	Exhauster funnel consist of	Absaugtrichter aus	
44015.002	10431759	Hex. nut M6-8	6kt-Mutter M6-8	
44015.003	10456142	Washer 6.4-St-200HV	Scheibe 6.4-St-200HV	
44015.004	10125507	Window LW 400x250	Fenster LW 400x250	
44015.005	10415414	Transition piece complete	Übergangsstück komplett	

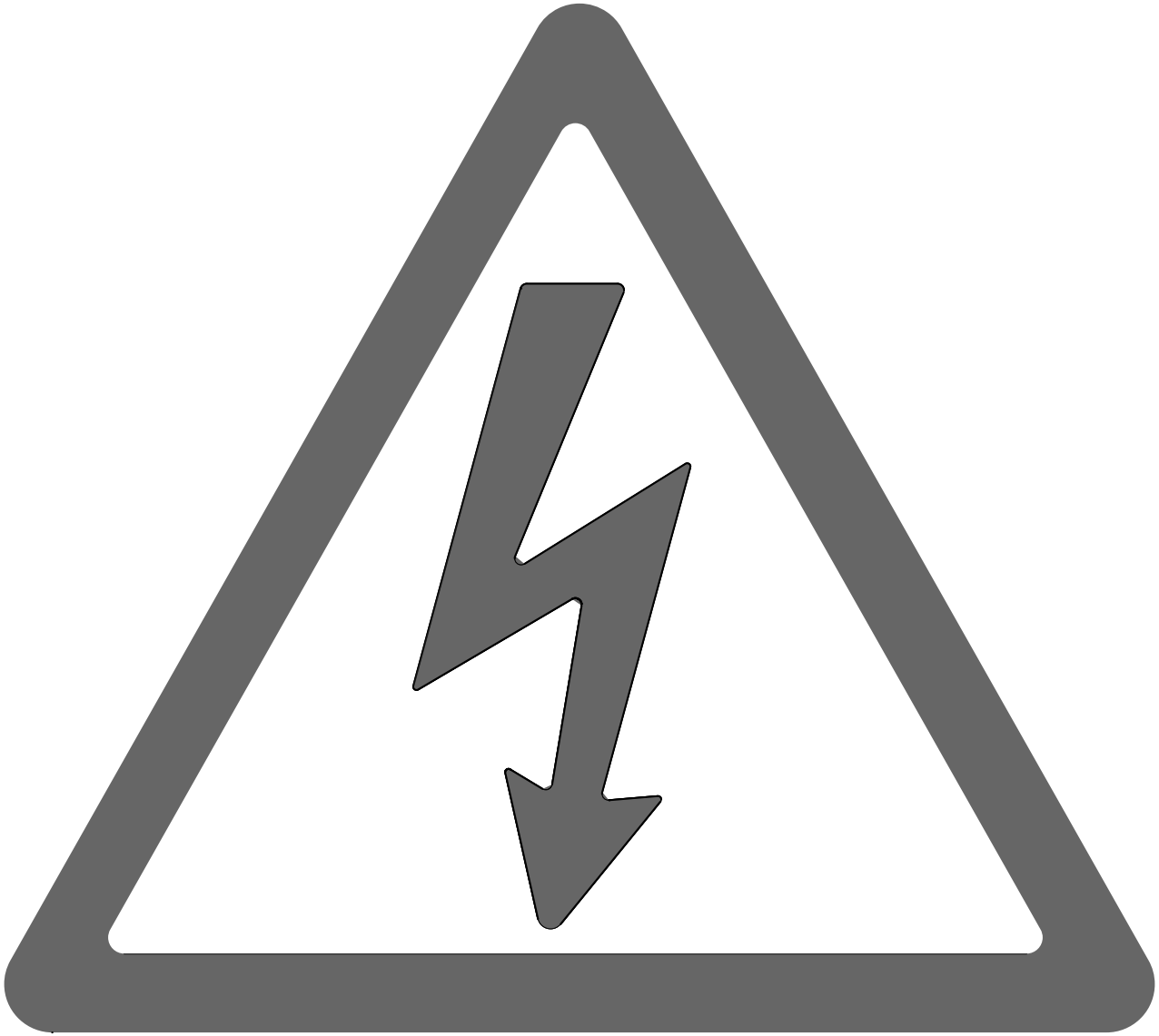

ZNP0000000000000010000678291010 00_1.svg

B 76

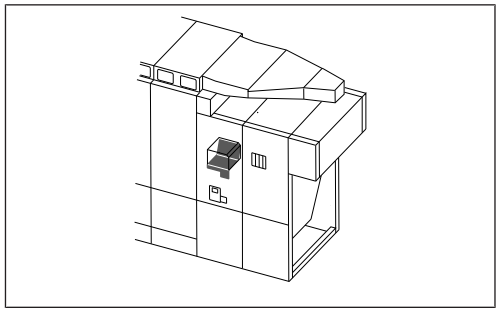

810

B 76

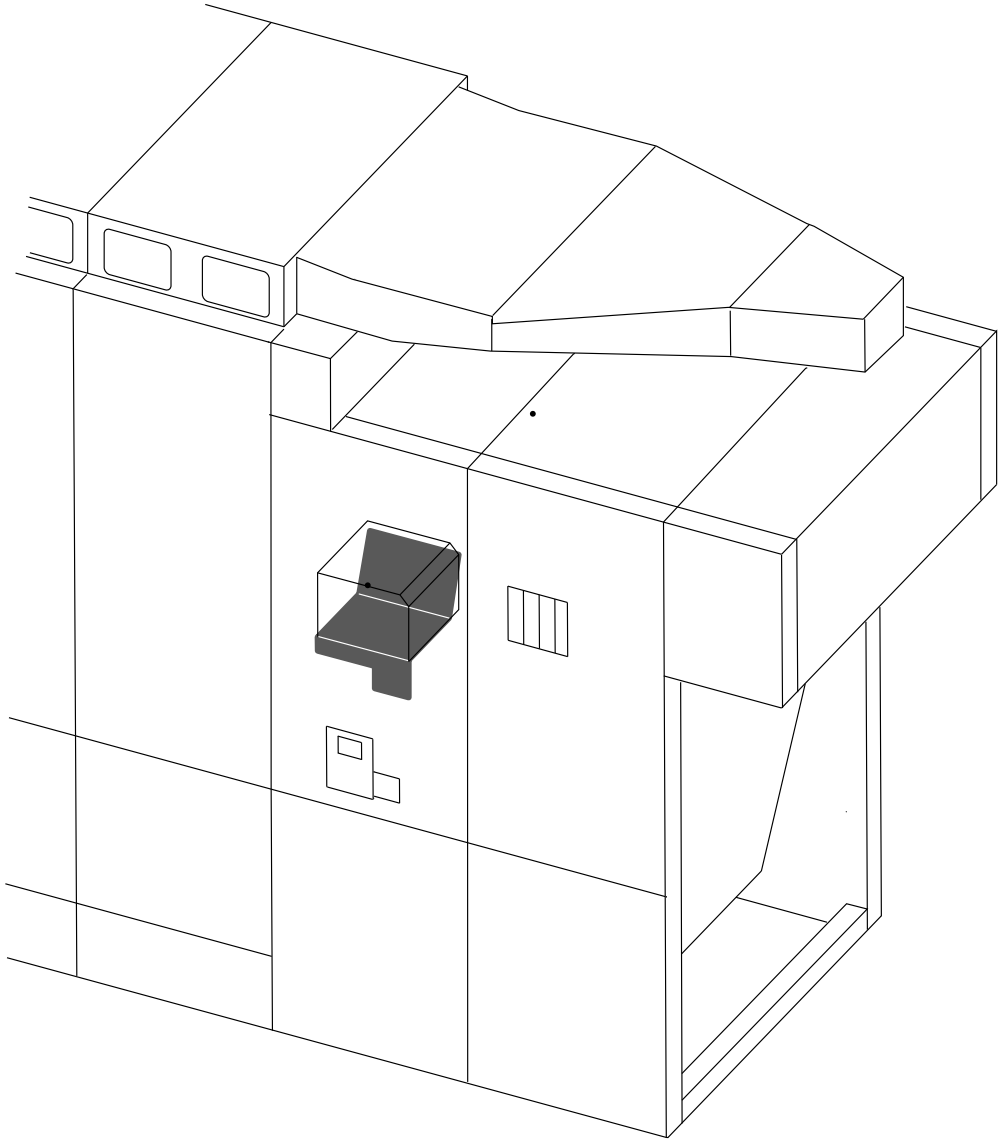

ZNP00000000000000100006782440100 0_1.svg

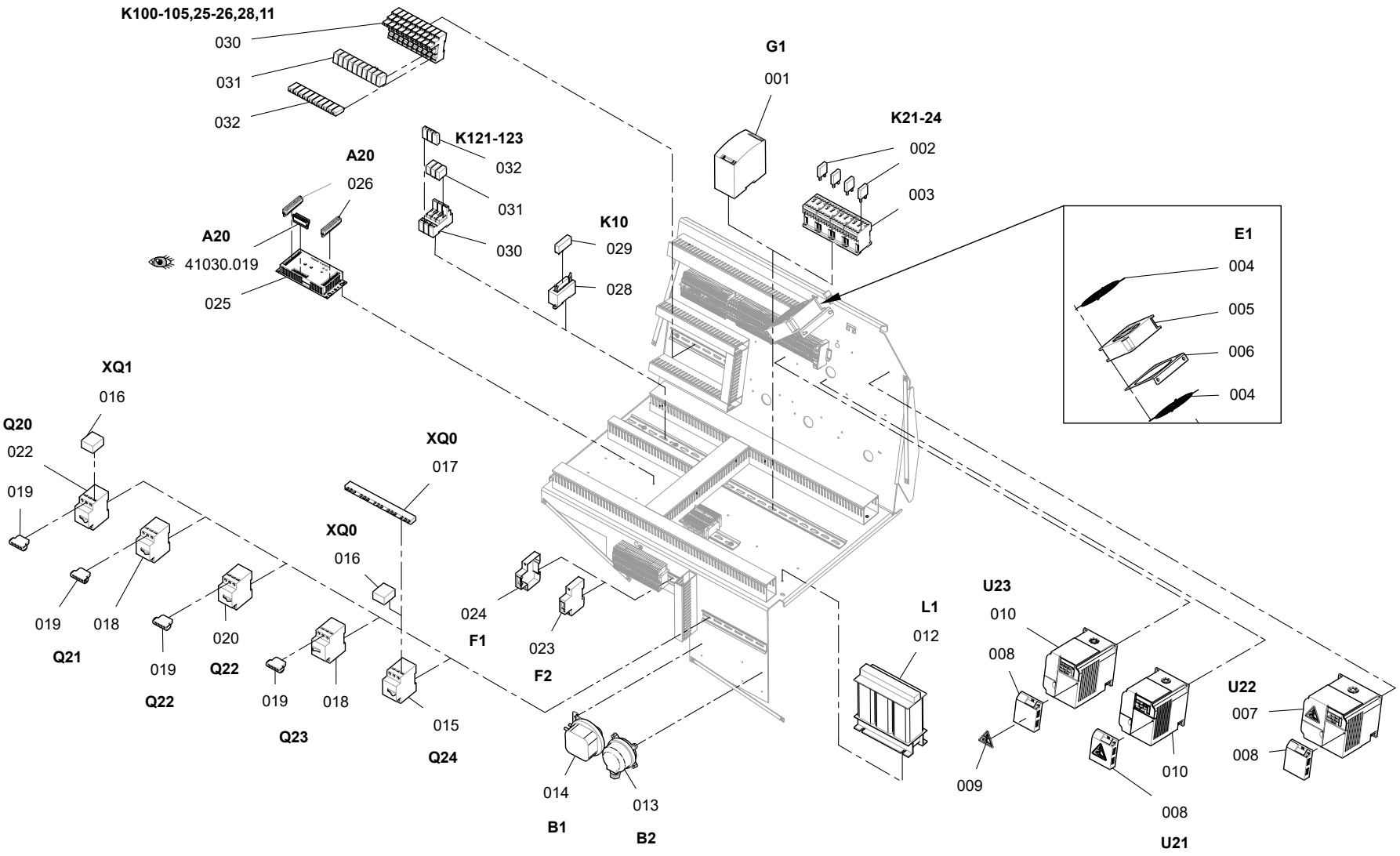

ZED0000000000000000001116154201002_1.svg

Customer
Blessed Textiles Ltd Unit 4, 56984

RIETER

Catalog No. Katalog-Nr.	Material no. Material-Nr.	Material Designation	Materialbezeichnung	Symbol Symbol
810.001	10315964	Power supply unit 3xAC400V/1xDC24V 20A	Netzgerät 3xAC400V/1xDC24V 20A	⊕
810.002	10779186	Varistor module DC24 S00	Varistor Modul DC24 S00	
810.003	10774554	Contactor 5,5kW DC24V 1NO S00	Schütz 5,5kW DC24V 1NO S00	
810.004	10354967	Finger protection 115.6 105x105	Fingerschutz 115.6 105x105	
810.005	10836135	Cooling fan DC24V 234m3/h 120x120	Kühlventilator DC24V 234m3/h 120x120	
810.006	10808986	Angle fan	Winkel Ventilator	
810.007	10575147	Frequency converter 5.5/7.5kW 380...480V	Frequenzumrichter 5.5/7.5kW 380...480V	
810.008	10688736	Interface T1000V CANopen/Terminal	Interface T1000V CANopen/Terminal	
810.009	10356219	Warning sign 50	Warnschild 50	
810.010	10575142	Frequency converter 0.75/1.5kW 380...480	Frequenzumrichter 0.75/1.5kW 380...480V	⊕
810.012	10630691	Throttle 3Ph 0,586mH 50A	Drossel 3Ph 0,586mH 50A	
810.013	10507814	Pressure transmitter 0...1000Pa 4...20mA	Druckmessumformer 0...1000Pa 4...20mA	⊕
810.014	10356188	Differential pressure switch 20...300Pa	Differenzdruckschalter 20...300Pa DC12..	
810.015	10771292	Motor protection switch 2.2-3.2A 100kA S	Motorschutzschalter 2.2-3.2A 100kA S00	⊕
810.016	10781383	Busbar block connection SL S00	Schienenblockverbindung SL S00	
810.018	10777103	Motor protection switch 3.5-5.0A 100kA S	Motorschutzschalter 3.5-5.0A 100kA S00	⊕
810.019	10772801	Contact block TA 1NO/1NC S00	Kontaktblock TA 1NO/1NC S00	
810.020	10771296	Motor protection switch 7.0-10A 100kA S0	Motorschutzschalter 7.0-10A 100kA S00	⊕
810.022	10771299	Motor protection switch 0.9-1.25A 100kA	Motorschutzschalter 0.9-1.25A 100kA S00	⊕
810.023	10327076	Contact block 1s1oe6/1A AC15:230/DC14:22	Kontaktblock 1s1oe6/1A AC15:230/DC14:220	
810.024	10351499	Automatic cut-out 1p 10A 230/415AC C10kA	Sicherungsautomat 1p 10A 230/415AC C10kA	
810.025	10043381	Combination modul 16DI+16DO,2EZ,1G/TP,CA	Kombinationsmodul 16DI+16DO,2EZ,1G/TP,CA	⊕
810.026	10126168	Plug socket R3,5 Fdz 18p 12A125V VS	Steckdose R3,5 Fdz 18p 12A125V VS	
810.028	10235750	Socket DC24V 14p 4Uk	Stecksockel DC24V 14p 4Uk	⊕
810.029	10235749	Safety relay 5NO/1NC DC24V	Sicherheitsrelais 5NO/1NC DC24V	⊕
810.030	10037121	Socket 8p Sr	Stecksockel 8p Sr	
810.031	10355004	Relay 2CO 1f RT III DC24V	Relais 2CO 1f RT III DC24V	
810.032	10370350	Diode module DC6-24V 1N4007 1A/1000V +A1	Diodenmodul DC6-24V 1N4007 1A/1000V +A1	

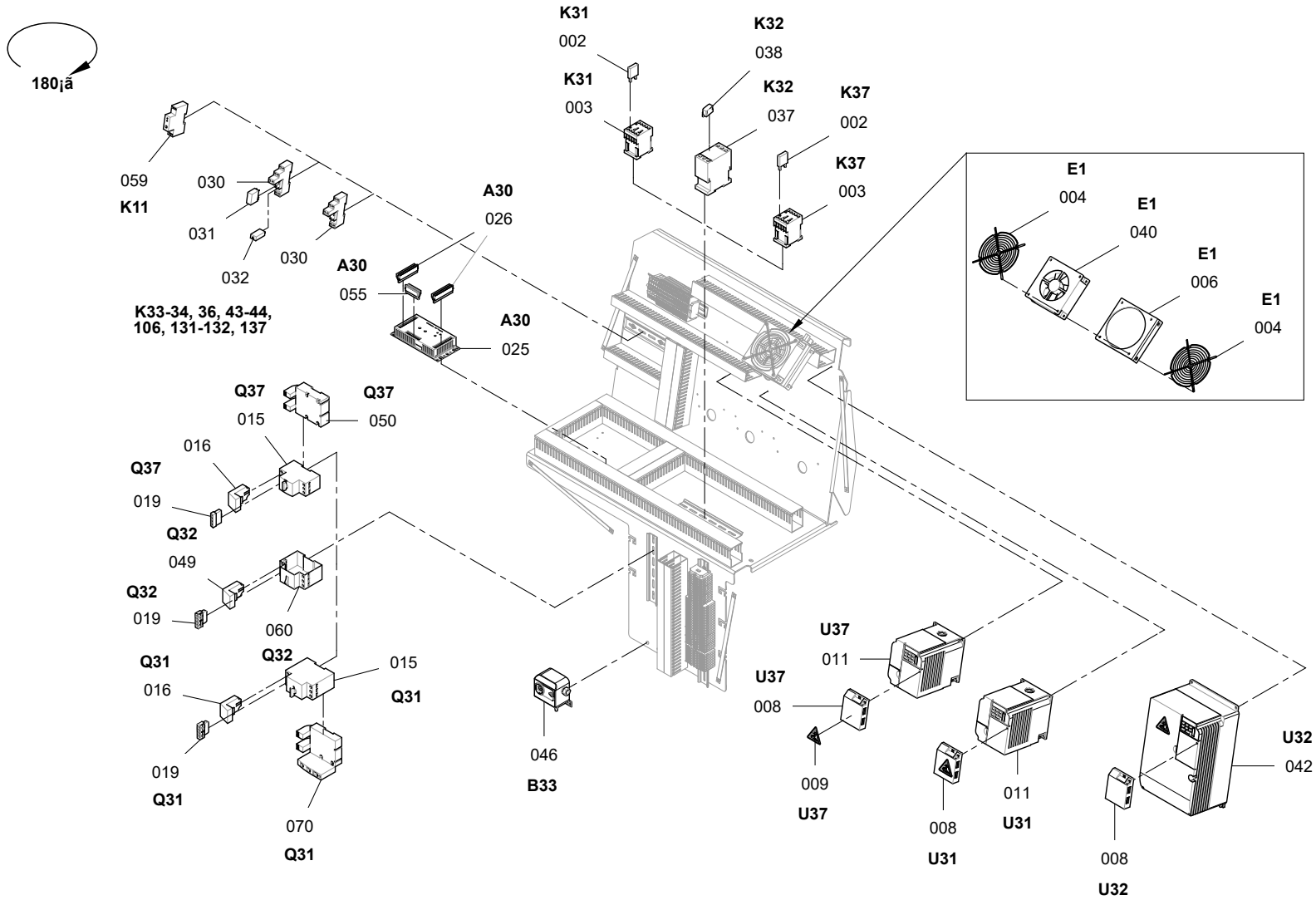

ZED0000000000000000001116154201002_2.svg

Catalog No. Katalog-Nr.	Material no. Material-Nr.	Material Designation	Materialbezeichnung	Symbol Symbol
810.002	10779186	Varistor module DC24 S00	Varistor Modul DC24 S00	
810.003	10774554	Contactor 5,5kW DC24V 1NO S00	Schütz 5,5kW DC24V 1NO S00	
810.004	10354967	Finger protection 115.6 105x105	Fingerschutz 115.6 105x105	
810.006	10808986	Angle fan	Winkel Ventilator	
810.008	10688736	Interface T1000V CANopen/Terminal	Interface T1000V CANopen/Terminal	
810.009	10356219	Warning sign 50	Warnschild 50	
810.011	10575143	Frequency converter 1.5/2.2kW 380...480V	Frequenzumrichter 1.5/2.2kW 380...480V	⊕
810.015	10771292	Motor protection switch 2.2-3.2A 100kA S	Motorschutzschalter 2.2-3.2A 100kA S00	⊕
810.016	10781383	Busbar block connection SL S00	Schienenblockverbindung SL S00	
810.019	10772801	Contact block TA 1NO/1NC S00	Kontaktblock TA 1NO/1NC S00	
810.025	10043381	Combination modul 16DI+16DO,2EZ,1G/TP,CA	Kombinationsmodul 16DI+16DO,2EZ,1G/TP,CA	⊕
810.026	10126168	Plug socket R3,5 Fdz 18p 12A125V VS	Steckdose R3,5 Fdz 18p 12A125V VS	
810.030	10037121	Socket 8p Sr	Stecksockel 8p Sr	
810.031	10355004	Relay 2CO 1f RT III DC24V	Relais 2CO 1f RT III DC24V	
810.032	10370350	Diode module DC6-24V 1N4007 1A/1000V +A1	Diodenmodul DC6-24V 1N4007 1A/1000V +A1	
810.070	10788175	Busbar system left 2 S00,S0	Sammelschienensystem links 2 S00,S0	

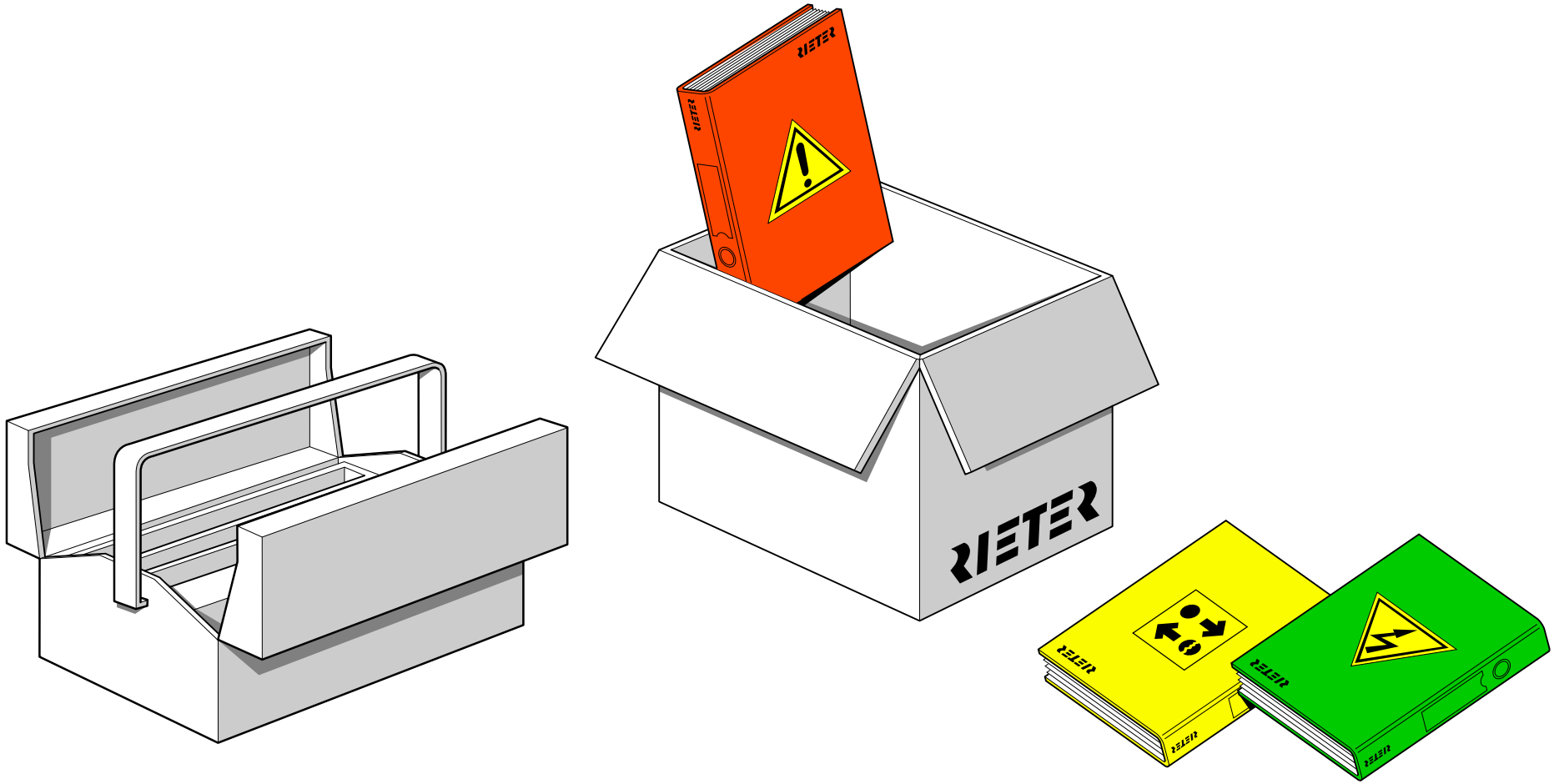

ZNP0000000000000001000067829201000_1.svg

B 76

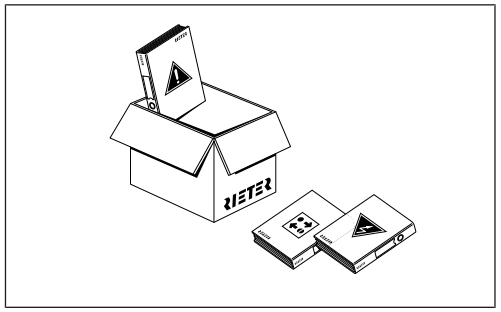

970

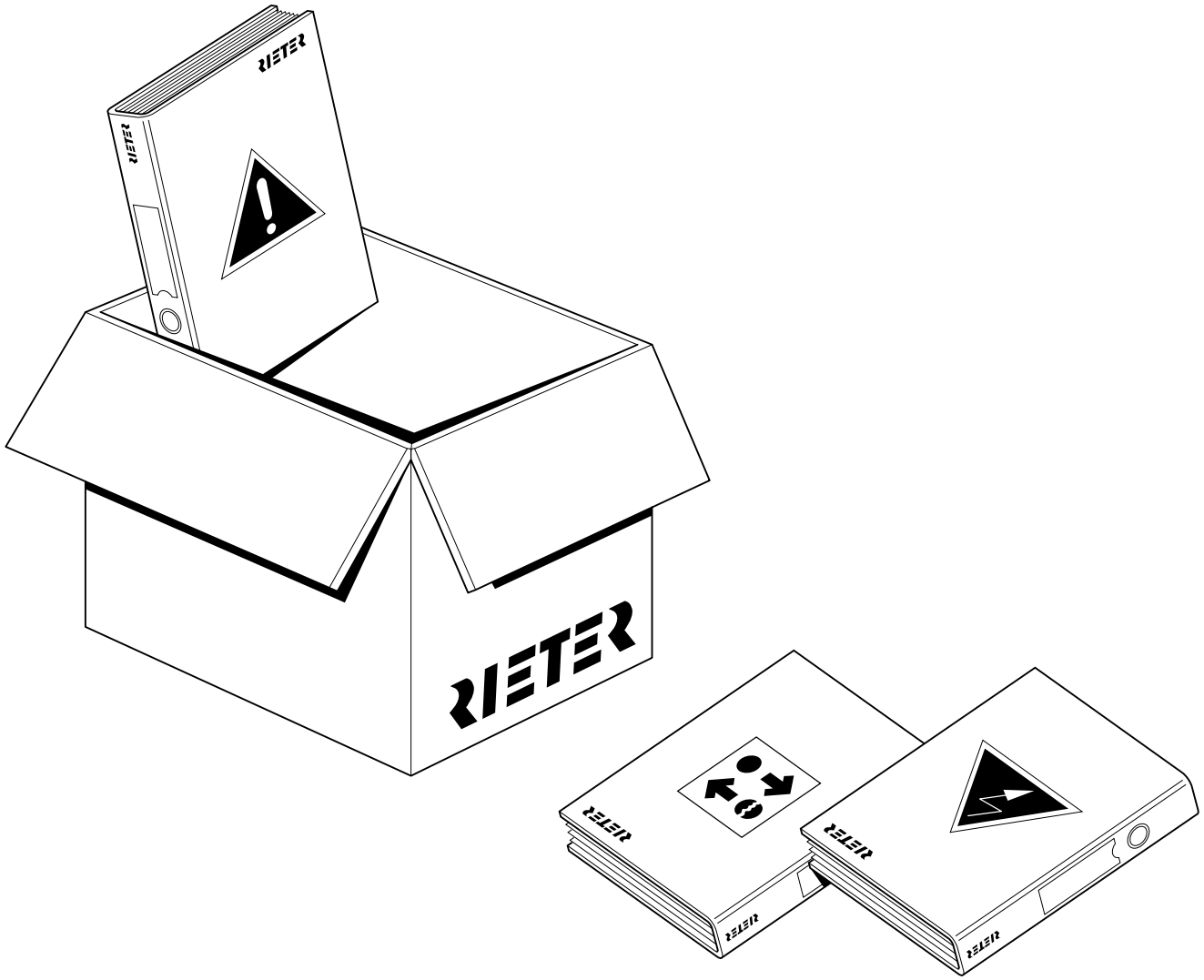

ZNP000000000000001000067824601000_1.svg

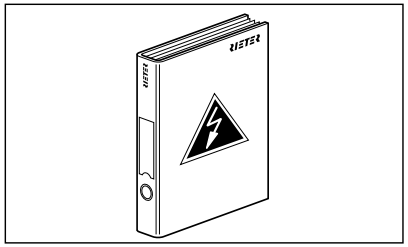

001

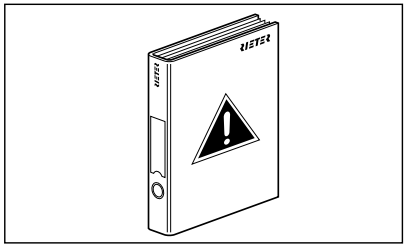

002

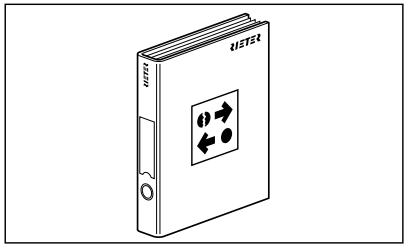

003

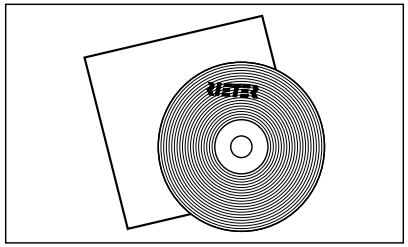

004

ZED0000000000000000001116154301001_1.svg

Customer
Blessed Textiles Ltd Unit 4, 56984

Catalog No. Katalog-Nr.	Material no. Material-Nr.	Material Designation	Materialbezeichnung	Symbol Symbol
970.001	10972099	Schema B 76 V3 en/de	Schema B 76 V3 en/de	
970.002	10963189	Operation manual B 76 en V3	Betriebsanleitung B 76 en V3	
970.003	10963212	Spare parts catalog B 76 V3	Ersatzteilkatalog B 76 V3	
970.004	10963213	Documentation digital B 76 V3	Dokumentation digital B 76 V3	

RIETER

RIETER

Rieter Machine Works Ltd.
Klosterstrasse 20
CH-8406 Winterthur
T +41 52 208 7171
F +41 52 208 8320
machines@rieter.com
aftersales@rieter.com

Rieter India Private Ltd.
Gat No. 768/2, Village Wing
Shindewadi-Bhor Road
Taluka Khandala, District Satara
IN-Maharashtra 412 801
T +91 2169 304 141
F +91 2169 304 226

Rieter (China) Textile Instruments Co., Ltd. Shanghai Branch
Unit B-1, 6F, Building A,
Synnex International Park
1068 West Tianshan Road
CN-Shanghai 200335
T +86 21 6037 3333
F +86 21 6037 3399

© Rieter. All content (text, photographs, drawings and graphic) is protected by copyright. It may not be changed, neither completely nor in extracts copied, duplicated or published without written approval. Machinery or parts thereof as shown in photographs or drawings or graphics may be subject of patent or design protection.

www.rieter.com